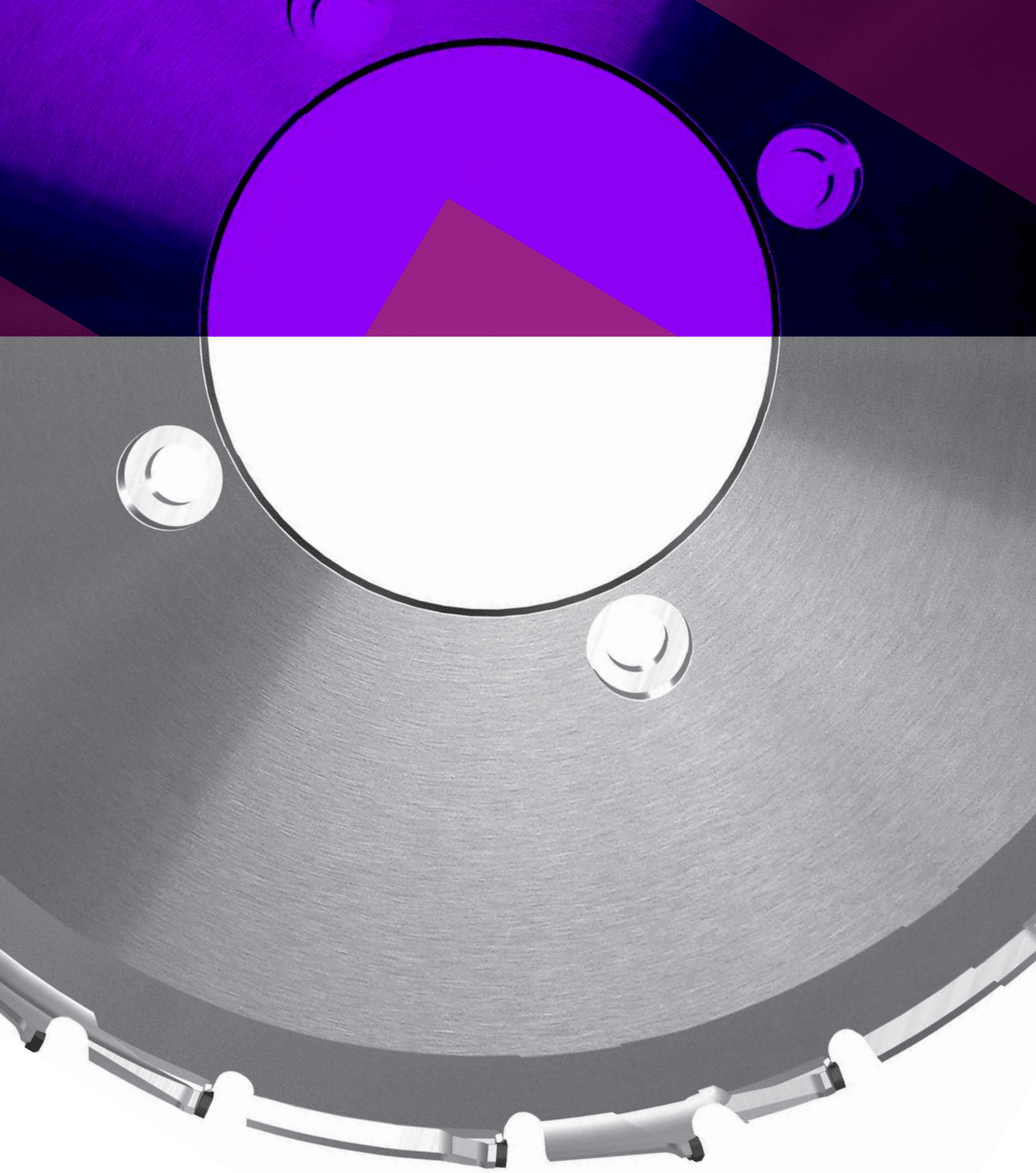

LEUCO

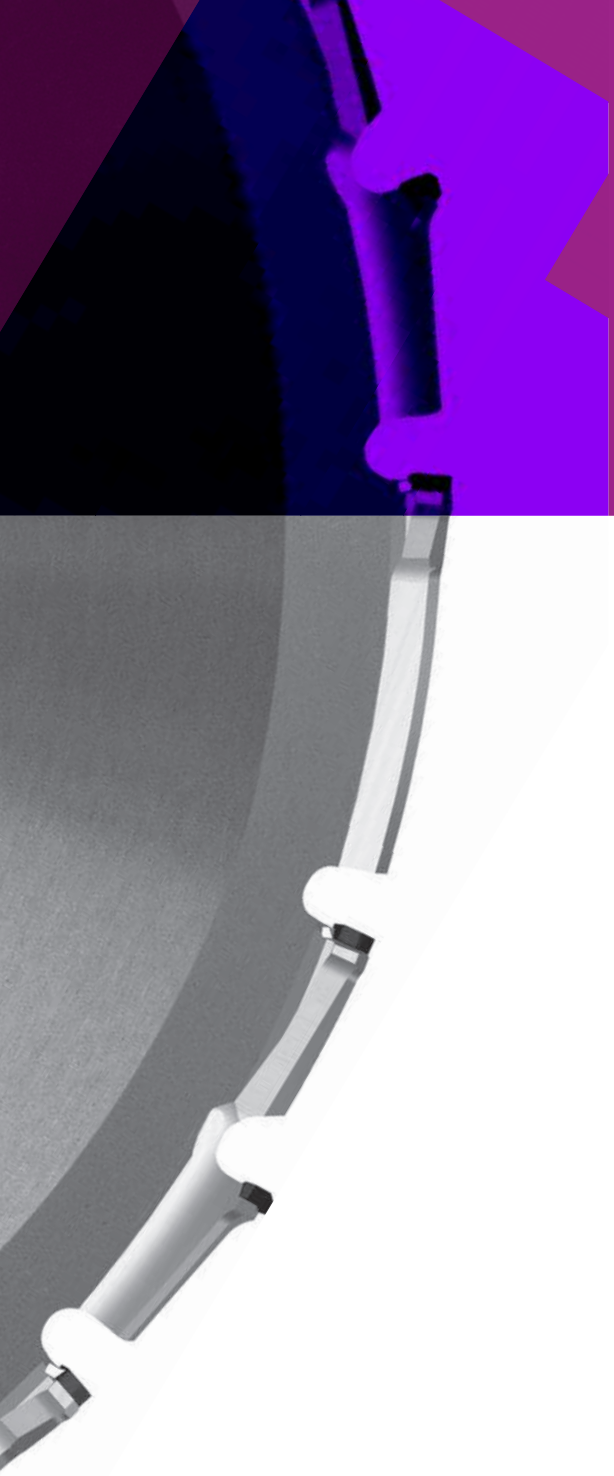

Hoggers

215052

PowerTec III Hoggers DP for LEUCO S-System Ø 160 mm and Ø 192 mm (DZ)

Product

Drawing

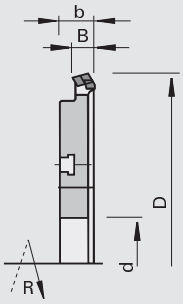

polycrystalline diamond [DP]

MEC

Machine / Application

- double end tenoners
- for chip-free sizing of raw, melamine-, paper-, HPL-laminated, foiled and veneered panels

Design

- n max = 7,200 min-1
- resharpening area 4 mm
- division of cut into low-noise hogger tooth and finish-cut tooth for optimum quality with closed cutting edges on one wing

Advantages

- also for high feed-speeds
- improved chip evacuation integrated into the tool
- high cutting quality for veneered panels due to division of cut
- extremely long edge lives thanks to optimized tooth form
- low vibration

Notes

- for double hogging process (DZ)
- application with feed
- sense of rotation according to DIN-EN 50144

Ø D	B	b	Ø d	Z	Feed DZ		Ident-No. [L]	Ident-No. [R]
250	14,5	23	60	16+8+4	28	S-System Ø 160	183451	183450
250	14,5	23	60	20+10+5	45	S-System Ø 160	183453	183452
250	14,5	23	60	28+14+7	60	S-System Ø 160	183455 s	183454 s
250	14,5	23	60	36+18+9	80	S-System Ø 160	183457 s	183456 s
250	14,5	23	80	16+8+4	28	S-System Ø 192	183461 s	183460 s
250	14,5	23	80	20+10+5	45	S-System Ø 192	183463 s	183462 s
250	14,5	23	80	28+14+7	60	S-System Ø 192	183465 s	183464 s
250	14,5	23	80	36+18+9	80	S-System Ø 192	183467 s	183466 s
[mm]	[mm]	[mm]	[mm]		[m/min]			

215352

PowerTec III topline Hoggers CM DP for LEUCO S-System Ø 160 mm and Ø 192 mm (DZ)

Product

Drawing

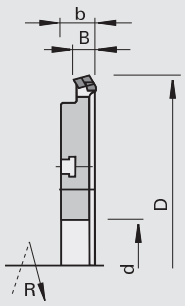

polycrystalline diamond [DP]

MEC

Machine / Application

- double end tenoners
- for chip-free sizing of raw, melamine-, paper-, HPL-laminated, foiled and veneered panels

Design

- reinforced DP cutting edges to avoid large circumference chippings
- full number of teeth also for the peripheral cutting edge and hogger tooth
- division of cut into low-noise hogger tooth and finish-cut tooth for optimum quality with closed cutting edges on one wing
- n max = 7,200 min-1
- resharpening area 4 mm

Advantages

- also for high feed-speeds
- improved chip evacuation integrated into the tool
- high cutting quality due to division of cut
- improved cutting quality especially when exiting the edge when cutting across the grain and low-quality cores
- extremely long edge lives thanks to optimized tooth form
- low vibration

Notes

- for double hogging process (DZ)
- application with feed
- sense of rotation according to DIN-EN 50144

Ø D	B	b	Ø d	Z	Feed DZ		Ident-No. [L]	Ident-No. [R]
250	9,5	23	60	16+16	30	S-System Ø 160	184617 s	184616 s
250	9,5	23	60	20+20	45	S-System Ø 160	184619	184618
250	9,5	23	60	28+28	60	S-System Ø 160	184621	184620
250	9,5	23	60	36+36	80	S-System Ø 160	184623 s	184622 s
250	14,5	23	60	16+16+4	30	S-System Ø 160	184601 s	184600 s
250	14,5	23	60	20+20+5	45	S-System Ø 160	184603	184602
250	14,5	23	60	28+28+7	60	S-System Ø 160	184605	184604
250	14,5	23	60	36+36+9	80	S-System Ø 160	184607 s	184606 s
250	9,5	23	80	16+16	30	S-System Ø 192	184625 s	184624 s
250	9,5	23	80	20+20	45	S-System Ø 192	184627	184626
250	9,5	23	80	28+28	60	S-System Ø 192	184629 s	184628 s
250	9,5	23	80	36+36	80	S-System Ø 192	184631 s	184630 s
250	14,5	23	80	16+16+4	30	S-System Ø 192	184609 s	184608 s
250	14,5	23	80	20+20+5	45	S-System Ø 192	184611	184610
250	14,5	23	80	28+28+7	60	S-System Ø 192	184613 s	184612 s
250	14,5	23	80	36+36+9	80	S-System Ø 192	184615 s	184614 s
[mm]	[mm]	[mm]	[mm]		[m/min]			

215044

UniTec Hoggers CM DP for LEUCO S-System Ø 160 mm and Bushing (RZ/DZ)

Product

Drawing

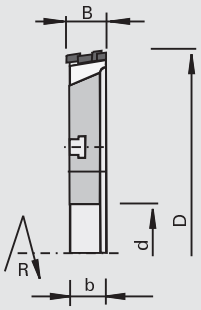

polycrystalline diamond [DP]

MEC

Machine / Application

- double end tenoners
- for chip-free sizing of raw, melamine-, paper-, HPL-laminated, foiled and veneered panels

Design

- resharpenable area 4 mm
- n max = 6,000 min-1
- division of cut in pre-cut and re-cut tooth

Advantages

- improved chip evacuation integrated into the tool (ChipMeister)
- reduced cleaning efforts
- reduced suction performance
- high quality of cut due to division of cut
- long edge lives thanks to optimized tooth form

Notes

- machining of 8 mm boards is also possible
- for scoring/hogging (RZ) and double hogging (DZ) process
- sense of rotation according to DIN-EN 50144

Ø D	B	b	Ø d	Z	Feed DZ	Ident-No. [L]	Ident-No. [R]
250	8	23	60	24+12	30	182115 s	182114 s
250	8	23	60	36+18	45	182031 s	182030 s
250	8	23	60	48+24	60	182033 s	182032 s
250	8	23	60	54+27	70	182035 s	182034 s
250	16	23	60	36+18+6	45	182037 s	182036 s
250	16	23	60	48+24+6	60	182039 s	182038 s
250	16	23	60	54+27+9	70	182041 s	182040 s
[mm]	[mm]	[mm]	[mm]		[m/min]		

215044

UniTec A Hoggers CM DP for LEUCO S-System Ø 160 mm and Bushing (RZ/DZ)

Product

Drawing

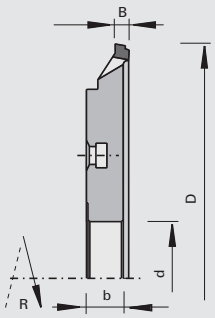

polycrystalline diamond [DP]

MEC

Machine / Application

- double end tenoners
- for chip-free sizing of raw, melamine-, paper-, HPL-laminated, foiled and veneered panels

Design

- resharpening area 4 mm
- n max = 6,000 min-1
- division of cut in pre-cut and re-cut tooth
- ascending chamfer at the step

Advantages

- improved chip evacuation integrated into the tool (ChipMeister)
- reduced cleaning efforts
- reduced suction performance
- high quality of cut due to division of cut
- long edge lives thanks to optimized tooth form

Notes

- machining of 8 mm boards is also possible
- for scoring/hogging (RZ) and double hogging (DZ) process
- sense of rotation according to DIN-EN 50144

Ø D	B	b	Ø d	Z	Feed DZ	Ident-No. [L]	Ident-No. [R]
250	10	23	60	36+18	40	183473 s	183472 s
250	10	23	60	48+24	50	183475 s	183474 s
250	10	23	60	60+30	75	183477 s	183476 s
[mm]	[mm]	[mm]	[mm]		[m/min]		

215044

UniTec Veneer Hoggers CM DP for LEUCO S-System Ø 160 mm and Bushing (RZ/DZ)

Product

Drawing

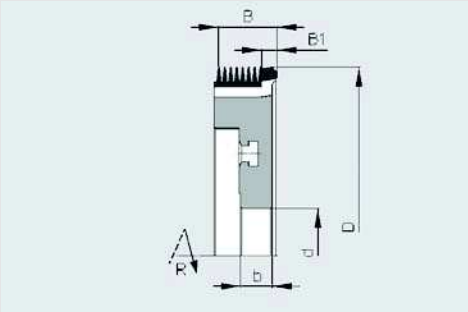

polycrystalline diamond [DP]

MEC

Machine / Application

- double end tenoners
- for chip-free sizing of veneered panels

Design

- DP-tipped
- resharpening area 4 mm
- n max = 6,000 min-1
- HS insert sets Z=2+2 for hogging of excess veneer

Advantages

- improved chip evacuation integrated into the tool (ChipMeister)
- reduced cleaning efforts
- high cutting quality for veneered panels due to division of cut
- long edge lives thanks to optimized tooth form
- low power consumption
- safe hogging of excess veneer
- no formation of strips
- no clogging of the exhaustion

Notes

- machining of 8 mm boards is also possible
- for scoring/hogging (RZ) and double hogging (DZ) process
- sense of rotation according to DIN-EN 50144

Ø D	B	B1	b	Ø d	Z	Feed DZ	Ident-No. [L]	Ident-No. [R]
250	34	8	23	60	48+24	60	182647 s	182646 s
[mm]	[mm]	[mm]	[mm]	[mm]		[m/min]		

Spare parts	Class-No.	Ident-No.
HS insert	332921	50570980

215044

UniTec Hoggers CM DP for LEUCO S-System Ø 192 mm (RZ/DZ)

Product

Drawing

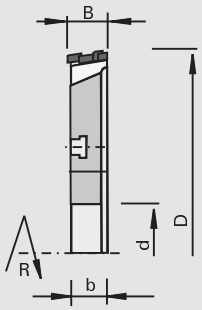

polycrystalline diamond [DP]

MEC

Machine / Application

- double end tenoners
- for chip-free sizing of raw, melamine-, paper-, HPL-laminated, foiled and veneered panels

Design

- resharpening area 4 mm
- n max = 6,000 min-1
- division of cut in pre-cut and re-cut tooth

Advantages

- improved chip evacuation integrated into the tool (ChipMeister)
- reduced cleaning efforts
- reduced suction performance
- high quality of cut due to division of cut
- long edge lives thanks to optimized tooth form

Notes

- especially for particle boards with loose core, recycling particle boards, particle boards with sensitive coating
- machining of 8 mm boards is also possible
- for scoring/hogging (RZ) and double hogging (DZ) process
- application with feed
- sense of rotation according to DIN-EN 50144

Ø D	B	b	Ø d	Z	Feed DZ	Ident-No. [L]	Ident-No. [R]
250	8	23	80	24+12	30	182117 s	182116 s
250	8	23	80	36+18	45	182119 s	182118 s
250	8	23	80	48+24	60	182121 s	182120 s
[mm]	[mm]	[mm]	[mm]		[m/min]		

215082

CompactTec N Hoggers CM DP for LEUCO Hydro-S-System Ø 160 mm and Bushing (RZ/DZ)

Product

Drawing

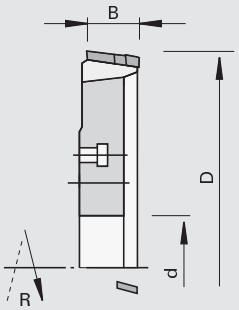

polycrystalline diamond [DP]

MEC

Machine / Application

- double-end tenoners
- edge banding machines
- for chip-free sizing of raw, melamine-, paper-, HPL-laminated, foiled and veneered panels

Design

- negative hook angle
- tooth configuration chamfer ascending
- with shear angle
- resharpenable area 4 mm

Advantages

- improved chip evacuation thanks to chip evacuation integrated in the tool (Chip-Meister)
- reduced cleaning effort
- reduction of suction power
- long edge lives thanks to negative hook angle
- minimal machine downtimes thanks to long edge lives
- excellent cutting quality thanks to high concentric and runout accuracy

Notes

- for scoring/hogging (RZ) and double hogging (DZ) process
- application with feed for cutting with and across the grain
- resharpenable on the flanks
- the specified feed rates are based on n = 6,000 min-1
- sense of rotation according to DIN-EN 50144

Ø D	B	b	Ø d	Z	Feed DZ	Ident-No. [L]	Ident-No. [R]
250	10	20	60	30+5+5	30	182537 s	182536 s
250	10	20	60	36+6+6	35	182539 s	182538 s
250	10	20	60	48+6+6	50	182541 s	182540 s
250	10	20	60	72+8+8	80	182545 s	182544 s
[mm]	[mm]	[mm]	[mm]		[m/min]		

215082

CompactTec N Hoggers CM DP for LEUCO S-System Ø 192 mm (RZ/DZ)

Product

Drawing

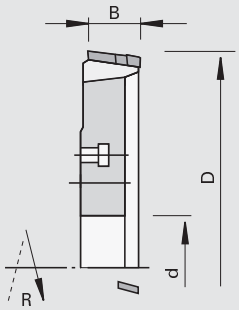

polycrystalline diamond [DP]

MEC

Machine / Application

- double end tenoners
- edge trimming machines
- for chip-free sizing of raw, melamine-, paper-, HPL-laminated, foiled and veneered panels

Design

- negative hook angle
- tooth configuration chamfer ascending
- with shear angle
- resharpenable area 4 mm

Advantages

- improved chip evacuation thanks to chip evacuation integrated in the tool (Chip-Meister)
- reduced cleaning effort
- reduction of suction power
- long edge lives thanks to negative hook angle
- minimal machine downtimes thanks to long edge lives
- excellent cutting quality thanks to high concentric and runout accuracy

Notes

- for scoring/hogging (RZ) and double hogging (DZ) process
- application with feed for cutting with and across the grain
- sides of teeth can be resharpened
- the specified feed rates are based on n = 6,000 min-1
- sense of rotation according to DIN-EN 50144

Ø D	B	b	Ø d	Z	Feed DZ	Ident-No. [L]	Ident-No. [R]
250	10	20	80	30+5+5	30	182547 s	182546 s
250	10	20	80	36+6+6	35	182549 s	182548 s
250	10	20	80	48+6+6	50	182551 s	182550 s
250	10	20	80	72+8+8	80	182555 s	182554 s
[mm]	[mm]	[mm]	[mm]		[m/min]		

215089

Compact Hogger DP - for dividing laminate boards

Product

Drawing

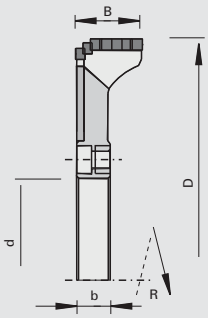

LEUCO compacttec

polycrystalline diamond [DP]

MEC

Machine / Application

- panel sizing saws
- laminate flooring

Design

- open gullet
- with shear angle
- resharpening area 4 mm

Advantages

- improved chip evacuation thanks to shear angle
- optimal positioning of knives from hogger to saw blade
- reduction of scouring on the tool

Notes

- application against feed for cutting along and across the grain
- sense of rotation according to DIN-EN 50144

Hogger on special flange 35 DKN 189750

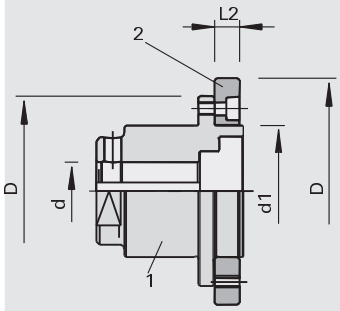

Ø D	B	Ø d	DKN	Z	NL	Ident-No. [L]	Ident-No. [R]
260	18	35	10x4	48+24+12+12	2x4/8/130	189737 s	189738 s
260	25	35	10x4	48+24+12+12	2x4/8/130	189739 s	189740 s
260	36	35	10x4	48+24+12+12	2x4/8/130	189741 s	189742 s
260	18	35	10x4	36+18+9+9	2x4/8/130	189743 s	189744 s
260	25	35	10x4	36+18+9+9	2x4/8/130	189745 s	189746 s
260	36	35	10x4	36+18+9+9	2x4/8/130	189747 s	189748 s
[mm]	[mm]	[mm]	[mm]				

Hogger on hydro bushing 172678 with special flange 189749

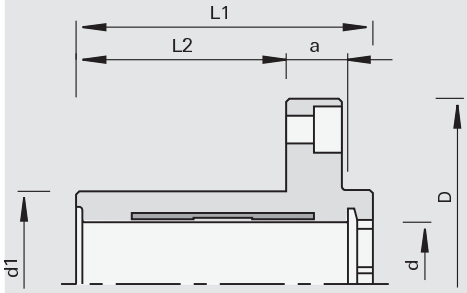

Ø D	B	Ø d	Z	NL	Ident-No. [L]	Ident-No. [R]
260	18	40	48+24+12+12	2x4/8/130	189752 s	189753 s
260	25	40	48+24+12+12	2x4/8/130	189754 s	189755 s
260	36	40	48+24+12+12	2x4/8/130	189756 s	189757 s
260	18	40	36+18+9+9	2x4/8/130	189758 s	189759 s
260	25	40	36+18+9+9	2x4/8/130	189760 s	189761 s
260	36	40	36+18+9+9	2x4/8/130	189762 s	189763 s
[mm]	[mm]	[mm]				

Hogger on hydro bushing 183821 - saw blade away from the spindle (version 1)

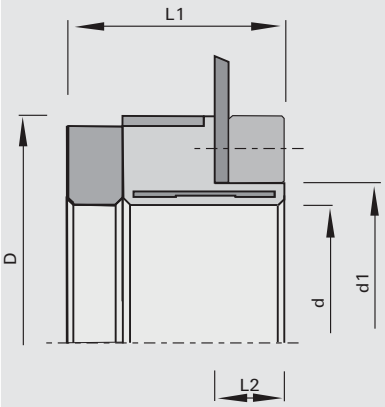

Ø D	B	Ø d	Z	NL	Ident-No. [L]	Ident-No. [R]
260	18	100	48+24+12+12	2x4/8/130	189809 s	189810 s
260	25	100	48+24+12+12	2x4/8/130	189811 s	189812 s
260	36	100	48+24+12+12	2x4/8/130	189813 s	189814 s
260	18	100	36+18+9+9	2x4/8/130	189815 s	189816 s
260	25	100	36+18+9+9	2x4/8/130	189817 s	189818 s
260	36	100	36+18+9+9	2x4/8/130	189819 s	189820 s
[mm]	[mm]	[mm]				

Hogger on hydro bushing 183821 - saw blade towards the spindle (version 2)

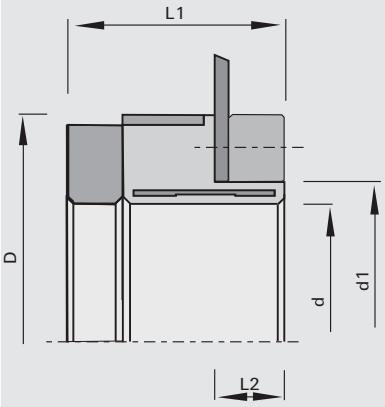

Ø D	B	Ø d	Z	NL	Ident-No. [L]	Ident-No. [R]
260	18	100	48+24+12+12	2x4/8/130	189821 s	189822 s
260	25	100	48+24+12+12	2x4/8/130	189823 s	189824 s
260	36	100	48+24+12+12	2x4/8/130	189825 s	189826 s
260	18	100	36+18+9+9	2x4/8/130	189827 s	189828 s
260	25	100	36+18+9+9	2x4/8/130	189829 s	189830 s
260	36	100	36+18+9+9	2x4/8/130	189831 s	189832 s
[mm]	[mm]	[mm]				

Hogger on hydro bushing 183829 - saw blade away from the spindle (version 1)

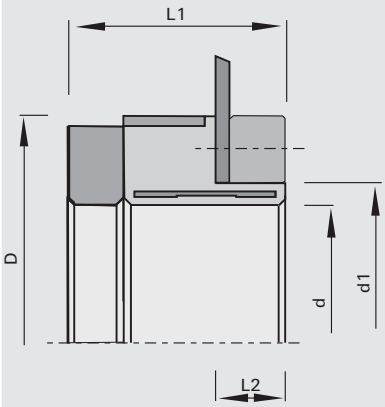

Ø D	B	Ø d	Z	NL	Ident-No. [L]	Ident-No. [R]
260	18	100	48+24+12+12	2x4/8/130	189764 s	189765 s
260	25	100	48+24+12+12	2x4/8/130	189766 s	189767 s
260	36	100	48+24+12+12	2x4/8/130	189768 s	189769 s
260	18	100	36+18+9+9	2x4/8/130	189770 s	189771 s
260	25	100	36+18+9+9	2x4/8/130	189772 s	189773 s
260	36	100	36+18+9+9	2x4/8/130	189774 s	189775 s
[mm]	[mm]	[mm]				

Hogger on hydro bushing 183829 - saw blade towards the spindle (version 2)

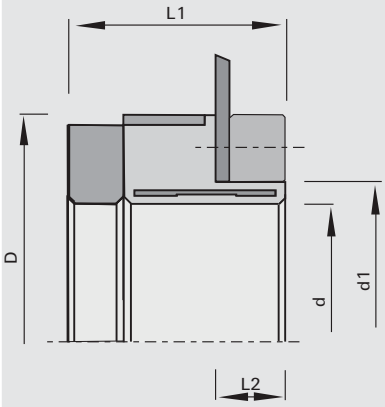

Ø D	B	Ø d	Z	NL	Ident-No. [L]	Ident-No. [R]
260	18	100	48+24+12+12	2x4/8/130	189776 s	189777 s
260	25	100	48+24+12+12	2x4/8/130	189778 s	189779 s
260	36	100	48+24+12+12	2x4/8/130	189780 s	189781 s
260	18	100	36+18+9+9	2x4/8/130	189782 s	189783 s
260	25	100	36+18+9+9	2x4/8/130	189784 s	189785 s
260	36	100	36+18+9+9	2x4/8/130	189786 s	189787 s
[mm]	[mm]	[mm]				

Attachment Sleeves and Flanges	Dimension	Class-No.	Ident-No.
Hydro Clamping Bushing	Ø120x96xØ60/40	933030	172678
attachment flange for hydro clamping bushing 172678	Ø147x69,4xØ110/60	997300	189749s
attachment bushing	Ø145x89,4xØ110/35 DKN	997300	189750s
Hydro Clamping Bushing	Ø145x65,5xØ110/100	933030	183829
Hydro Clamping Bushing	Ø150x49,5xØ110/100	933030	183821s
	[mm]		

115122

Segment Hoggers HW - Circular Cut “WS”

Product

Drawing

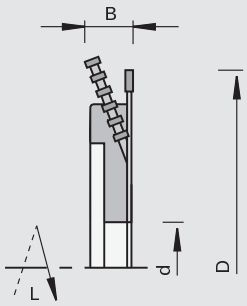

LEUCO DUR

tungsten carbide [HW]

MEC

Machine / Application

- double-board edgers and edgers
- double end tenoners
- for chip-free sizing of raw, melamine-, paper-, HPL-laminated, foiled and veneered panels

Design

- tooth configuration of the saw blade: alternate top bevel “WS”

Advantages

- excellent quality of cut thanks to high concentric and runout accuracy
- optimum hogging of the offal thanks to cut division of the cutting edges

Notes

- application with feed for cutting with the grain
- replacement saw blades: sizing saw blade Class-No. 102320 ATB
- sense of rotation see drawing

Ø D	B	Ø d	Z	Z segments	Ident-No. [L]	Ident-No. [R]
300	30	60	60	6 x 8	053174 &	053210 &
300	30	60	72	6 x 8	005437 s	005509 s
300	30	80	72	6 x 8	005440 s	005512 s
300	40	80	72	6 x 10	005446 s	005518 s
355	30	60	72	6 x 8	004283 &	004355 &
355	40	60	72	6 x 10	004289 &	004361 &
355	30	80	72	6 x 8	004286 &	004358 &
355	40	80	72	6 x 10	004292 &	004364 &
350	40	80	54	6 x 10	004895 &	004823 &
350	30	60	72	6 x 8	053211 &	053175 &
350	30	80	72	6 x 8	053214 &	053178 &
350	30	60	84	6 x 8	005510 &	005438 &
350	40	80	84	6 x 10	005519 &	005447 &
350	30	60	108	6 x 8	005654 &	005582 &
[mm]	[mm]	[mm]				

115122

Segment Hoggers HW - Stepped Cut “WS”

Product

Drawing

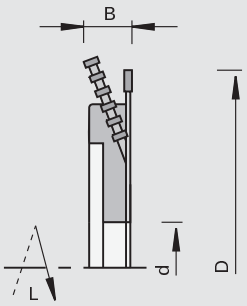

tungsten carbide [HW]

MEC

Machine / Application

- double-board edgers and edgers
- double end tenoners
- for chip-free sizing of raw, melamine-, paper-, HPL-laminated, foiled and veneered panels

Design

- tooth configuration of the saw blade: alternate top bevel “WS”

Advantages

- excellent quality of cut thanks to high concentric and runout accuracy
- optimum hogging of the offal thanks to cut division of the cutting edges

Notes

- application with feed for cutting across the grain
- replacement saw blades: sizing saw blade Class-No. 102320 ATB
- sense of rotation see drawing

Ø D	B	Ø d	Z	Z segments	Ident-No. [L]	Ident-No. [R]
300	30	80	48	6 x 8	004834 &	004906 &
300	40	60	60	6 x 10	053198 &	053234 &
300	30	80	72	6 x 8	005458 s	005530 s
350	40	60	72	6 x 10	053199 &	053235 &
350	40	80	84	6 x 10	005465 &	005537 &
355	30	60	72	6 x 8	004301 &	004373 &
355	40	60	72	6 x 10	004307 &	004379 &
355	40	80	72	6 x 10	004310 &	004382 &
[mm]	[mm]	[mm]				

115147

Segment Hoggers HW - Circular Cut “TR-F”

Product

Drawing

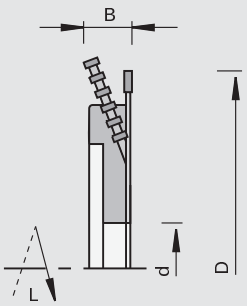

tungsten carbide [HW]

MEC

Machine / Application

- double-board edgers and edgers
- double end tenoners
- for chip-free sizing of raw, melamine-, paper-, HPL-laminated, foiled and veneered panels

Design

- tooth configuration of the saw blade: triple chip / flat “TR-F”

Advantages

- excellent quality of cut thanks to high concentric and runout accuracy
- optimum hogging of the offal thanks to cut division of the cutting edges

Notes

- application with feed for cutting with the grain
- replacement saw blades: panel sizing saw blade Class-No. 104370 triple chip / flat
- sense of rotation see drawing

Ø D	B	Ø d	Z	Z segments	Ident-No. [L]	Ident-No. [R]
305	30	60	60	6 x 8	172951 &	172955 &
[mm]	[mm]	[mm]				

115521

Segment Hoggers HW for LEUCO S-System Ø 192 mm - Circular Cut „F“ (RZ/DZ)

Product

Drawing

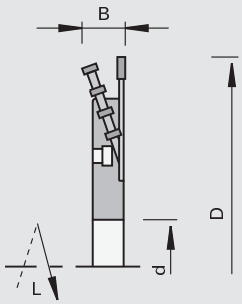

tungsten carbide [HW]

MEC

Machine / Application

- double end tenoners
- edge trimming machines
- for chip-free sizing of raw, melamine-, paper-, HPL-laminated, foiled and veneered panels

Design

- tooth configuration of the saw blade: flat "F"
- RPM: for B = 18 mm n max = 7,200 min-1 / for B = 36 mm n max = 6,000 min-1

Advantages

- excellent cutting quality thanks to high concentric and runout accuracy
- decreased downtimes thanks to extremely long edge lives
- optimum hogging of the offal thanks to cut division of the cutting edges with shear angle

Notes

- application with feed for cutting with the grain
- for scoring/hogging (RZ) and double hogging (DZ) process
- sense of rotation see drawing

Ø D	B	Ø d	Z	Z segments	Ident-No. [L]	Ident-No. [R]
250	18	80	48	6 x 4	160877 &	160879 &
250	18	80	72	6 x 4	160878 &	160880 &
250	36	80	48	12 x 4	164400 &	164401 &
250	36	80	72	12 x 4	164402 &	164403 &
[mm]	[mm]	[mm]				

115321

Segment Hoggers HW mounted on Bushing - Circular Cut “F” (RZ/DZ)

Product

Drawing

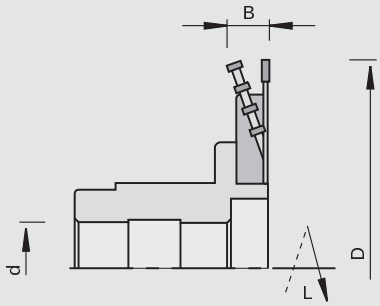

LEUCO DUR

tungsten carbide [HW]

MEC

Machine / Application

- double end tenoners
- edge trimming machines
- for chip-free sizing of raw, melamine-, paper-, HPL-laminated, foiled and veneered panels

Design

- tooth configuration of the saw blade: flat “F”
- Ø 200 mm: n max = 9,500 min-1
- Ø 250 mm: n max = 7,600 min-1

Advantages

- excellent quality of cut thanks to high concentric and runout accuracy
- optimum hogging of the offal thanks to cut division of the cutting edges

Notes

- application with feed
- for scoring/hogging (RZ) and double hogging (DZ) process
- sense of rotation see drawing

Ø D	B	Ø d	Z	Z segments		Ident-No. [L]	Ident-No. [R]
200	18	40	40	4 x 4	B+G	005864 &	005928 &
200	18	40	40	4 x 4	M+S	005865 &	005929 &
200	18	35	40	4 x 4	Homag, Homburg, SCM-IDM, IMA 14 / 16 / 19 / 20	005876 &	005940 &
200	18	40	60	4 x 4	M+S	005993 &	006057 &
200	18	30	60	4 x 4	Lehbrink, Wadkin	005997 &	006061 &
200	18	35	60	4 x 4	Homag, Homburg, SCM-IDM, IMA 14 / 16 / 19 / 20	006004 &	006068 &
250	18	40	72	6 x 4	B+G	057158 &	057159 &
250	18	35	72	6 x 4	Celaschi	057160 &	057161 &
250	18	40	72	6 x 4	Gabbiani (spindle with key)	057164 &	057165 &
250	18	35	72	6 x 4	Homag, Homburg, IMA, Koch	057168 &	057169 &
250	18	40	72	6 x 4	M+S	057172 &	057173 &
250	18	35	48	6 x 4	Celaschi	162159 &	162163 &
250	18	40	48	6 x 4	M+S	162175 &	162179 &
250	18	40	48	6 x 4	Gabbiani (spindle with key)	162223 &	162227 &
250	18	35	48	6 x 4	Homag, SCM-IDM, Homburg, IMA	162239 &	162243 &
[mm]	[mm]	[mm]					

115301

Segment Extensions HW - Circular Cut

Product

Drawing

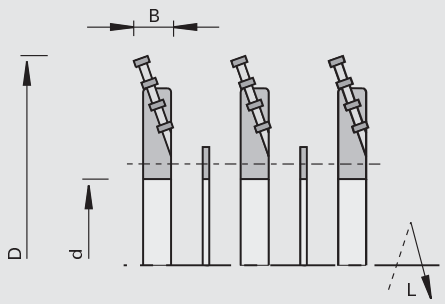

tungsten carbide [HW]

MEC

Machine / Application

- for hogging of large offal widths and veneer overhang

Design

Advantages

Notes

- extendable to 72 mm
- for subsequent extension of existing folding hoggers Ø 200 mm and Ø 250 mm
- the extensions consist of a body with installed HW segments, spacer and screws
- sense of rotation see drawing

Ø D	B	Ø d	Z	Ident-No. [L]	Ident-No. [R]
200	18 - 36	80	4 x 4	006406 &	006407 &
200	18 - 54	80	8 x 4	006408 &	006409 &
250	18 - 36	80	6 x 4	058390 &	058391 &
250	18 - 54	80	12 x 4	058392 &	058393 &
250	36 - 54	80	6 x 4	058396 &	058397 &
250	36 - 72	80	12 x 4	058398 &	058399 &
250	54 - 72	80	6 x 4	058402 &	058403 &
[mm]	[mm]	[mm]			

102312

Sizing Saw Blades HW for Segment Hoggers “F”

Product

Drawing

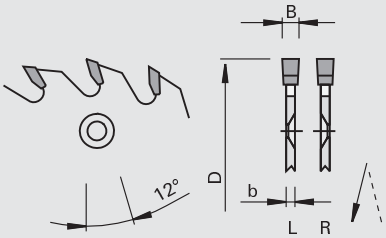

tungsten carbide [HW]

MEC

Machine / Application

- double end tenoners
- edge trimming machines
- for sizing cuts in laminated and raw panels

Design

- tooth configuration: flat “F”
- cutting material: HW HL Board 06

Advantages

Notes

- bore diameter 100 mm for S-System hogger
- sense of rotation see drawing

Ø D	B	b	Ø d	Z	NL	Ident-No. [L]	Ident-No. [R]
200	4,0	2.8	80	40	4/6,5/140	188226	188227
200	4,0	2.8	80	60	4/6,5/140	188228 $	188229
250	4,0	2.8	80	48	6/6,5/200	188230	188231
250	4,0	2.8	100	48	6/6,5/200	188238	188239
250	4,0	2.8	80	72	6/6,5/200	188236	188237
250	4,0	2.8	100	72	6/6,5/200	188240 $	188241
[mm]	[mm]	[mm]	[mm]				

102320

Circular Saw Blades HW for Segment Hoggers “WS”

Product

Drawing

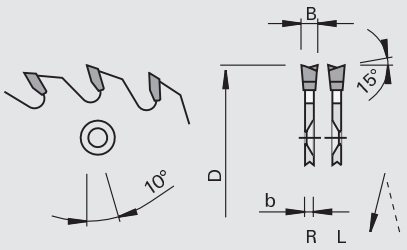

tungsten carbide [HW]

MEC

Machine / Application

- double end tenoners
- edge trimming machines
- for sizing cuts in raw and laminated panels

Design

- tooth configuration: ATB “WS”
- cutting material: HW HL Board 06

Advantages

- optimum cutting quality and edge life

Notes

- with pin holes for LEUCO Segment Hoggers
- sense of rotation acc. to DIN-EN 50144

Ø D	B	b	Ø d	Z	NL	Ident-No. [L]	Ident-No. [R]
355	4,4	3.0	80	72	6/5,5/300	189055	189054
[mm]	[mm]	[mm]	[mm]				

102328

Sizing Saw Blades HW - LowNoise for Segment Hoggers “WS”

Product

Drawing

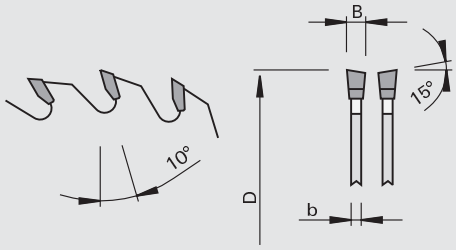

tungsten carbide [HW]

Machine / Application

Design

- tooth configuration: ATB “WS”

Advantages

Notes

- circular saw blades for large hoggers
- when ordering, please indicate hogger type: circular cut or stepped cut
- prices valid for saw blades only; additional pinholes, countersinks and reboring to fit onto hoggers at a surcharge
- other dimensions and versions see chapter “Circular Saw Blades”
- Combi2 = 2/7/42 + 2/9/46 + 2/10/60

Ø D	B	b	Ø d	Z	NL	Ident-No.
300	3,2	2.2	60	48		188185 &
300	3,2	2.2	30	48	Combi2	189668
300	3,2	2.2	30	60	Combi2	189669
300	3,2	2.2	30	72	Combi2	192102 $
300	3,2	2.2	30	96	Combi2	192103 $
350	3,5	2.5	30	72	Combi2	189671
350	3,5	2.5	30	84	Combi2	192104
350	3,5	2.5	30	108	Combi2	192105
[mm]	[mm]	[mm]	[mm]			

102320

Panel Sizing Saw Blades HW for Segment Hoggers “WS”

Product

Drawing

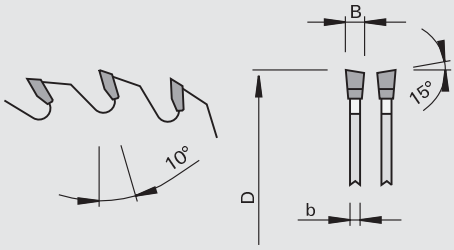

tungsten carbide [HW]

Machine / Application

Design

- tooth configuration: ATB “WS”

Advantages

Notes

- circular saw blades for large hoggers
- when ordering, please indicate hogger type: circular cut or stepped cut
- prices valid for saw blades only; additional pinholes, countersinks and reboring to fit onto hoggers at a surcharge
- other dimensions and versions see chapter “Circular Saw Blades”

Ø D	B	b	Ø d	Z	Ident-No.
355	4,4	3.0	60	54	188504
355	4,4	3.0	30	72	188506
355	4,4	3.0	60	72	188507
[mm]	[mm]	[mm]	[mm]		

104370

Panel Sizing Saw Blades HW for Segment Hoggers “TR-F”

Product

Drawing

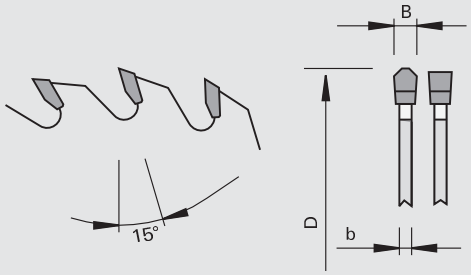

tungsten carbide [HW]

Machine / Application

Design

- tooth configuration: triple chip / flat “TR-F”

Advantages

Notes

- circular saw blades for large hoggers
- when ordering, please indicate hogger type: circular cut or stepped cut
- prices valid for saw blades only; additional pinholes, countersinks and reboring to fit onto hoggers at a surcharge
- other dimensions and versions see chapter “Circular Saw Blades”

Ø D	B	b	Ø d	Z	Ident-No.
305 [mm]	4,4 [mm]	2.8 [mm]	60 [mm]	60	192028

202062

Sizing Saw Blades DP for Segment Hoggers „ES-FA“

Product

Drawing

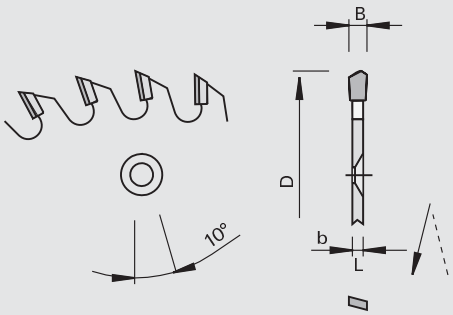

polycrystalline diamond [DP]

MEC

Machine / Application

- double end tenoners
- edge trimming machines
- for chip-free sizing of raw, melamine-, paper-, HPL-laminated, foiled and veneered panels

Design

- tooth configuration: top bevel with chamfer and face shear "ES-FA"
- saw blade with equal tooth pitch
- n max = 9,000 min-1 with Ø 200 mm
- n max = 7,200 min-1 with Ø 250 mm
- resharpenable area 4 mm; sides of teeth can be resharpened

Advantages

Notes

- application against feed
- for scoring/hogging (RZ) and double hogging (DZ) process
- for combination with LEUCO Segment Hoggers: Ø 80 on Segment Hoggers with standard bushing / Ø 100 on Segment Hoggers for S-System
- the specified feed rates are based on n = 6,000 min-1
- sense of rotation see drawing

Ø D	B	b	Ø d	Z	Feed RZ	Feed DZ	Ident-No. [L]	Ident-No. [R]
200	4	2.8	80	24	15	25	170397 s	170398 s
200	4	2.8	80	28	17,5	30	170399 s	170400 s
200	4	2.8	80	32	20	32,5	170401 s	170402 s
200	4	2.8	80	36	22,5	35	170403 s	170404 s
200	4	2.8	80	40	25	40	170405 s	170406 s
200	4	2.8	80	44	27,5	45	170407 s	170408 s
200	4	2.8	80	48	30	50	170409 s	170410 s
250	4	2.8	80	24	15	25	170495 s	170496 s
250	4	2.8	80	30	20	32,5	170497 s	170498 s
250	4	2.8	80	36	25	40	170499 s	170500 s
250	4	2.8	80	42	27,5	45	170501 s	170502 s
250	4	2.8	80	48	30	50	170503 s	170504 s
250	4	2.8	80	54	35	55	170505 s	170506 s
250	4	2.8	80	60	40	60	170507 s	170508 s
250	4	2.8	80	66	45	65	170509 s	170510 s
250	4	2.8	80	72	50	70	170511 s	170512 s
250	4	2.8	100	24	15	25	170621 s	170622 s
250	4	2.8	100	30	20	32,5	170623 s	170624 s
250	4	2.8	100	36	25	40	170625	170626
250	4	2.8	100	42	27,5	45	170627 s	170628 s
250	4	2.8	100	48	30	50	170629	170630
250	4	2.8	100	54	35	55	170631 s	170632 s
250	4	2.8	100	60	40	60	170633 s	170634 s
250	4	2.8	100	66	45	65	170635 s	170636 s
250	4	2.8	100	72	50	70	170637 s	170638 s
[mm]	[mm]	[mm]	[mm]		[m/min]	[m/min]		

116200

Segments HW for Segment Hoggers - Circular Cut with shear angle

Product

Drawing

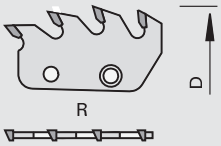

tungsten carbide [HW]

Machine / Application

- for complete hogging of the offal in wood-based panels

Design

- the first tooth of the segment features a 10 degree bevel on the side of the tooth
- with shear angle
- HW-tipped

Advantages

- no end chipping when cutting along the grain

Notes

- for offal widths to 18 mm
- ready-to-use in HW and DP Segment Hoggers Ø 200 mm and Ø 250 mm
- segments must be installed in sets; one set consists of 4 HW segments for Ø 250 mm / 6 HW segments for Ø 250 mm
- for scoring/hogging (RZ) and double hogging (DZ) process

Ø D	Z		Ident-No. [L]	Ident-No. [R]
200/250	4	DZ	171395	171396
[mm]				

116200

Segments HW for Segment Hoggers - Stepped Cut

Product

Drawing

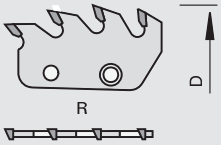

tungsten carbide [HW]

MEC

Machine / Application

- for complete hogging of the offal in wood-based panels

Design

- Ident-No.177376 and 177377: the first tooth of the segment features a 10 degree bevel on the side of the tooth
- with shear angle
- HW-tipped

Advantages

- no end chipping when cutting across the grain

Notes

- for offal widths to 18 mm
- ready-to-use in HW and DP Segment Hoggers Ø 200 mm and Ø 250 mm
- segments must be installed in sets; one set consists of 4 HW segments for Ø 250 mm / 6 HW segments for Ø 250 mm
- for scoring/hogging (RZ) and double hogging (DZ) process

Ø D	Z		Ident-No. [L]	Ident-No. [R]
200/250	4	stepped cut	177374	177375
200/250	4	stepped cut	177376	177377
[mm]				

116200

Segments HW for Segment Hoggers - Circular Cut

Product

Drawing

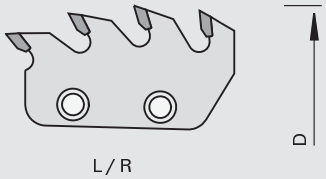

tungsten carbide [HW]

Machine / Application

- for complete hogging of the offal in wood-based panels

Design

- HW-tipped
- segments for both left-hand and right-hand use

Advantages

- no end chipping when cutting along the grain

Notes

- for offal widths to 18 mm
- ready-to-use in HW Segment Hoggers Ø 200 mm and Ø 250 mm
- segments must be installed in sets; one set consists of 4 HW segments for Ø 250 mm / 6 HW segments for Ø 250 mm
- for scoring/hogging (RZ) and double hogging (DZ) process

Ø D	Z		Ident-No.
200/250	4	RZ	168680
200/250	4	DZ	167118

[mm]

116100

Segments HW for Segment Hoggers - Stepped Cut

Product

Drawing

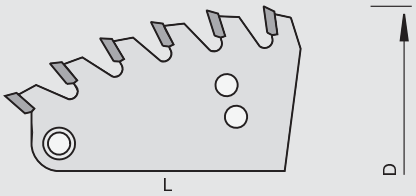

LEUCO DUR

tungsten carbide [HW]

MEC

Machine / Application

- for complete hogging of the offal in wood-based panels

Design

- segments for both left-hand and right-hand use

Advantages

- no end chipping when cutting along or across the grain thanks to stepped cut configuration

Notes

- ready-to-use in HW Segment Hoggers Ø 250 mm (old design) / Ø 300 mm - Ø 430 mm
- segments must be installed in sets; one set consists of 4 HW segments for Ø 250 mm (old design) / 6 HW segments for Ø 300 - 430 mm
- for scoring/hogging (RZ) and double hogging (DZ) process
- segments can be used for circular cut and stepped cut configuration

Ø D	Z	Ident-No. [L]	Ident-No. [R]
250	6	006120	006129
250	8	006121	006130 #
300	6	006123	006132
300	8	006124	006133
300	10	006125	006134
350/430	6	006126	006135
350/430	8	006127	006136
350/430	10	006128	006137

[mm]

216200

Segments for Segment Hoggers - Circular Cut Z=1 DP + 3 HW

Product

Drawing

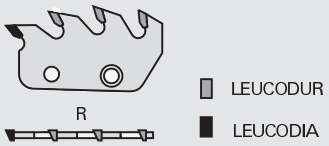

polycrystalline diamond [DP]

Machine / Application

- for complete hogging of the offal in wood-based panels

Design

- the first tooth is DP-tipped, the following teeth are HW-tipped
- the first tooth of the segment features a 10 degree bevel on the side of the tooth
- with shear angle

Advantages

- no end chipping when cutting along the grain

Notes

- for offal widths to 18 mm
- ready-to-use in DP Segment Hoggers Ø 200 mm and Ø 250 mm
- segments must be installed in sets; one set consists of 4 DP segments for Ø 250 mm / 6 DP segments for Ø 250 mm
- for scoring/hogging (RZ) and double hogging (DZ) process

Ø D	Z	Ident-No. [L]	Ident-No. [R]
200/250 [mm]	1+3	172288	172289

216200

Segments for Segment Hoggers - Circular Cut Z=2 DP + 2 HW

Product

Drawing

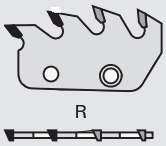

polycrystalline diamond [DP]

Machine / Application

- for complete hogging of the offal in wood-based panels

Design

- the first and second tooth are DP-tipped, the following teeth are HW-tipped
- the first tooth of the segment features a 10 degree bevel on the side of the tooth
- with shear angle

Advantages

- no end chipping when cutting along the grain

Notes

- for offal widths to 18 mm
- ready-to-use in DP Segment Hoggers Ø 200 mm and Ø 250 mm
- segments must be installed in sets; one set consists of 4 DP segments for Ø 250 mm / 6 DP segments for Ø 250 mm
- for scoring/hogging (RZ) and double hogging (DZ) process

Ø D	Z	Ident-No. [L]	Ident-No. [R]
200/250 [mm]	2+2	172290 s	172291 s

Spare parts		Dimension	Class-No.	Ident-No.
Countersunk Flat Headed Screws	for attaching the segments	M8x12,5	995192	180010
Countersunk Flat Headed Screws		M5x12	995122	180007
Spacers		115x1,0x80,5	955520	009255
Head Cap Screws	for attaching the extension (18 and 36 mm)	M8x16	995111	180004
Head Cap Screws	for attaching the extension (54 mm)	M8x30	995111	180005
Head Cap Screws	for attaching the extension (72 mm)	M8x50	995111	180006
Cranked Wrench Keys		SW5 DIN ISO 2936	985730	009674
Screwdrivers	for hoggers	9,0 [mm]	985730	011088

115421

Folding Segment Hoggers HW mounted on Bushing - Circular Cut „F“

Product

Drawing

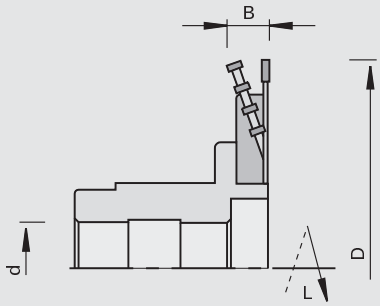

LEUCO DUR

tungsten carbide [HW]

MEC

Machine / Application

- folding machines
- for cutting of V grooves and rabbets in laminated and veneered panels

Design

- tooth configuration of the saw blade: flat "F"
- RPM n = 3,000 min-1 and n = 6,000 min-1depending on the machine

Advantages

Notes

- application against feed
- circular saw blade and segments have the same diameter
- the opening angle of > 90 degrees must be determined per application
- sense of rotation see drawing

H	Ø D	B	Ø d	Z	Z segments		Ident-No. [L]	Ident-No. [R]
25,0	200	36	30	40	8 x 4	Lehbrink	017385 &	017384 &
12,5	200	18	30	40	4 x 4	Lehbrink	017390 &	017391 &
37,5	200	54	30	40	12 x 4	Lehbrink	017392 &	017393 &
12,5	200	18	35	40	4 x 4	Koch, Lehbrink	051210 &	051207 &
25,0	200	36	35	40	8 x 4	Koch, Lehbrink	051211 &	051208 &
37,5	200	54	35	40	12 x 4	Koch, Lehbrink	051212 &	051209 &
16,0	200	22	30	40	4 x 5	Lehbrink	162010 &	162011 &
16,0	200	22	35	40	4 x 5	Koch, Lehbrink	162012 &	162013 &
16,0	200	22	40	40	4 x 5	M+S	162608 &	162607 &
12,5	250	18	30	48	6 x 4	Lehbrink	164013 &	164014 &
25,0	250	36	30	48	12 x 4	Lehbrink	164015 &	164016 &
37,5	250	54	30	48	18 x 4	Lehbrink	164017 &	164018 &
12,5	250	18	35	48	6 x 4	Koch, Lehbrink	164019 &	164020 &
25,0	250	36	35	48	12 x 4	Koch, Lehbrink	164021 &	164022 &
37,5	250	54	35	48	18 x 4	Koch, Lehbrink	164023 &	164024 &
16,0	250	22	30	48	6 x 5	Lehbrink	164025 &	164026 &
16,0	250	22	35	48	6 x 5	Koch, Lehbrink	164027 &	164028 &
16,0	250	22	40	48	6 x 5	M+S	164029 &	164030 &
[mm]	[mm]	[mm]	[mm]					

115621

Folding Segment Hoggers HW for LEUCO S-System Ø 192 - Circular Cut „F“

Product

Drawing

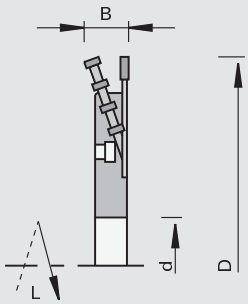

tungsten carbide [HW]

MEC

Machine / Application

- folding systems Homag, Koch, Lehbrink
- for cutting of V grooves and rabbets in laminated and veneered panels

Design

- tooth configuration of the saw blade: flat "F"
- n max = 7,200 min-1

Advantages

Notes

- application against feed
- circular saw blade and segments have the same diameter
- the opening angle of > 90 degrees must be determined per application
- sense of rotation see drawing

H	Ø D	B	Ø d	Z	Z segments	Ident-No. [L]	Ident-No. [R]
12,5	250	18	80	48	6 x 4	161995 &	161996 &
16,0	250	22	80	48	6 x 5	162682 &	162683 &
[mm]	[mm]	[mm]	[mm]				

115401

Folding Segment Extensions HW - Circular Cut

Product

Drawing

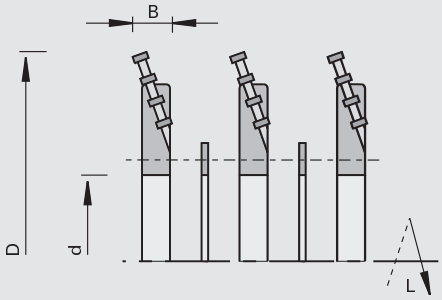

tungsten carbide [HW]

MEC

Machine / Application

- for cutting of V grooves in thick panels

Design

- HW-tipped

Advantages

Notes

- extendable to 54 mm
- for subsequent extension of existing folding hoggers Ø 200 mm and Ø 250 mm
- the diameters of existing folding hoggers and folding extensions must match
- the extension assemblies consist of a body with installed HW segments, spacer and screws
- sense of rotation see drawing

Ø D	B	Ø d	Z	Ident-No. [L]	Ident-No. [R]
200	18 - 36	80	4 x 4	017395 &	017396 &
200	18 - 54	80	8 x 4	017397 &	017398 &
200	36 - 54	80	4 x 4	017399 &	017400 &
250	18 - 36	80	6 x 4	164007 &	164008 &
250	18 - 54	80	12 x 4	164009 &	164010 &
250	36 - 54	80	6 x 4	164011 &	164012 &
[mm]	[mm]	[mm]			

116210

Segments HW for Folding Segment Hogger

Product

Drawing

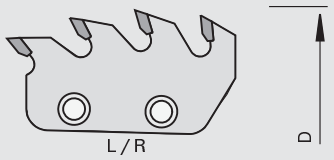

tungsten carbide [HW]

MEC

Machine / Application

- for complete hogging of the offal during the V-groove cutting process

Design

- HW-tipped

Advantages

Notes

- ready-to-use in HW Folding Segment Hoggers Ø 200 mm and Ø 250 mm and for extensions
- circular saw blade and segments must have the same diameter
- segments can be used for clockwise and counter-clockwise rotation

Ø D [mm]	Z	Ident-No.
200	4	168757
250	4	168760

116210

Segments HW for Folding Segment Hogger

Product

Drawing

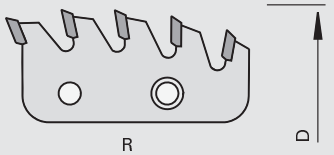

tungsten carbide [HW]

MEC

Machine / Application

- for complete hogging of the offal during the V-groove cutting process

Design

- HW-tipped

Advantages

Notes

- ready-to-use in HW Folding Segment Hoggers Ø 200 mm and Ø 250 mm and for extensions
- circular saw blade and segments must have the same diameter

Ø D [mm]	Z	Ident-No. [L]	Ident-No. [R]
200	5	168759	168758
250	5	168761	168762

115775

Saw Hoggers HW for finger jointing lines - Grecon

Product

Drawing

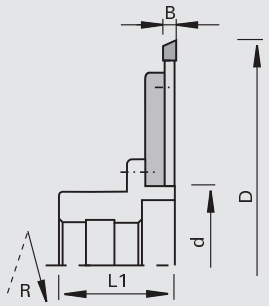

tungsten carbide [HW]

MEC

Machine / Application

- finger jointing lines
- for chip-free cross-cutting of solid woods

Design

Advantages

- clean, chip-free cuts and long edge lives thanks to special cutting geometry
- precise fit for finger joints
- low noise level

Notes

- included in delivery: hogger saw blade, flange, screws and screwdrivers (not mounted); sleeve not included in delivery
- sense of rotation acc. to DIN-EN 50144

Ø D	B	b	L1	Ø d	Z	DKN		Ident-No. [L]	Ident-No. [R]
250	8	44	59	80	60	12x3,3	Grecon	182379 &	182378 &
[mm]	[mm]	[mm]	[mm]	[mm]		[mm]			

Spare parts	Dimension	Class-No.	Ident-No. [L]	Ident-No. [R]
Hogging Saw Blades	Ø250x6,3/5xØ75 Z80	102350	189033	189032
Hogging Saw Blades	Ø250x8,0/6,1xØ80 Z60	102350	189223	189222
Flanges	Ø210x8,4xØ80	997370		182377
Countersunk Flat Headed Screws	M8x20 DIN 7991-8.8	995121		056378
Countersunk Flat Headed Screws	M5x12 T20	995125		166709
Screwdrivers	T20x100	985730		166092
Bushings for Grecon	Ø113x59x40DKN	997370		189100
Bushings for DIMTER	Ø206x100,3x38 DKN	997370		178294
	[mm]			

115775

Saw Hoggers HW mounted on bushing for finger jointing lines - Grecon

Product

Drawing

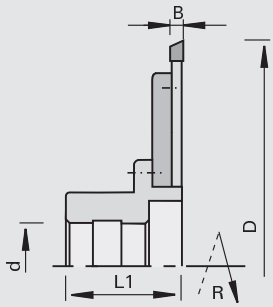

tungsten carbide [HW]

MEC

Machine / Application

- finger jointing lines
- for chip-free cross-cutting of solid woods

Design

Advantages

- clean, chip-free cuts and long edge lives thanks to special cutting geometry
- precise fit for finger joints
- low noise level

Notes

- sense of rotation acc. to DIN-EN 50144

Ø D	B	b	L1	Ø d	Z	DKN		Ident-No. [L]	Ident-No. [R]
250	8	44	59	40	60	12x3,3	Grecon	182599 &	182600 &
350	10	44	59	40	60+12	12x3,3	Grecon	182611 &	182612 &
[mm]	[mm]	[mm]	[mm]	[mm]		[mm]			

Spare parts	Dimension	Class-No.	Ident-No. [L]	Ident-No. [R]
Hogging Saw Blades	Ø250x6,3/5xØ75 Z80	102350	189033	189032
Hogging Saw Blades	Ø250x8,0/6,1xØ80 Z60	102350	189223	189222
Hogging Saw Blades	Ø350x10,0xØ80 Z60+12	102350	189246 #	189247 #
Flanges	Ø210x8,4xØ80	997370		182377
Countersunk Flat Headed Screws	M8x20 DIN 7991-8.8	995121		056378
Countersunk Flat Headed Screws	M5x12 T20	995125		166709
Screwdrivers	T20x100	985730		166092
Bushings for Grecon	Ø113x59x40DKN	997370		189100
Bushings for Grecon-Combipact	Ø250x8x40	997370		178783
	[mm]			

115775

Saw Hoggers HW mounted on bushing for finger jointing lines - NKT

Product

Drawing

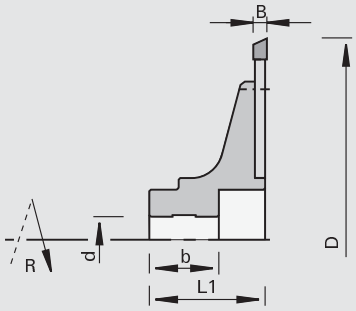

LEUCO DUR

tungsten carbide [HW]

MEC

Machine / Application

- finger jointing lines
- for chip-free cross-cutting of solid woods

Design

Advantages

- clean, chip-free cuts and long edge lives thanks to special cutting geometry
- precise fit for finger joints
- low noise level

Notes

- sense of rotation acc. to DIN-EN 50144

Ø D	B	b	L1	Ø d	Z	DKN		Ident-No. [L]	Ident-No. [R]
250	8	84	102	38	60	10x4	NKT	182601 &	182602 &
300	8	84	102	38	60	10x4	NKT	182607 &	182608 &
350	10	84	102	38	60+12	10x4	NKT	182613 &	182614 &
[mm]	[mm]	[mm]	[mm]	[mm]		[mm]			

Spare parts	Dimension	Class-No.	Ident-No. [L]	Ident-No. [R]
Hogging Saw Blades	Ø250x8,0/6,1xØ80 Z60	102350	189223	189222
Hogging Saw Blades	Ø300x8,0/6,1xØ80 Z60	102350	189244	189245
Hogging Saw Blades	Ø350x10,0xØ80 Z60+12	102350	189246 #	189247 #
Countersunk Flat Headed Screws	M5x12 T20	995125		166709
Screwdrivers	T20x100	985730		166092
Bushings for DIMTER	Ø206x100,3x38 DKN	997370		178294
	[mm]			

115775

Saw Segment Hogger HW mounted on bushing for finger jointing lines - Grecon

Product

Drawing

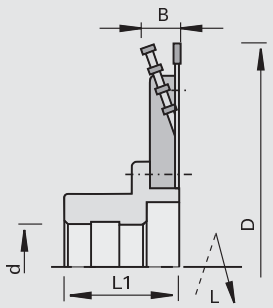

tungsten carbide [HW]

MEC

Machine / Application
- finger jointing lines
- for chip-free cross-cutting of solid woods

Design

Advantages
- clean, chip-free cuts and long edge lives thanks to special cutting geometry
- precise fit for finger joints
- low noise level

Notes
- sense of rotation see drawing

Ø D	B	b	L1	Ø d	Z	DKN		Ident-No. [L]	Ident-No. [R]
250	16,3	44	59	40	48+(6x4)	12x3,3	Grecon	189097 &	189096 &
[mm]	[mm]	[mm]	[mm]	[mm]		[mm]			

Spare parts	Dimension	Class-No.	Ident-No. [L]	Ident-No. [R]
Hogger Saw Blade	Ø250x4,0/2,8xØ120 Z48	102312	189092	189093
HW segments	Ø250 Z=4	116200	189094	189094
Bushings for Grecon	Ø113x59x40DKN	997370		189100
Countersunk Flat Headed Screws	M6x10	995190		699437
Countersunk Flat Headed Screws	M5x10 DIN EN ISO 2009	995122		055881
Head Cap Screws	M8x16 DIN912	995111		001891
Screwdrivers	SW4x100	985730		166091
Screwdrivers	8	985730		053874
	[mm]			

105320

Scoring Saw Blades HW “WS” - for finger joint machines

Product

Drawing

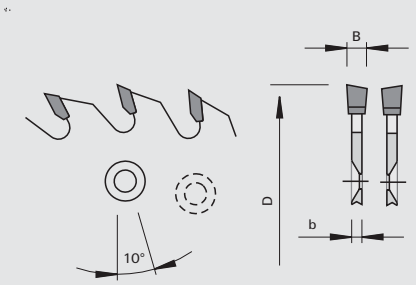

tungsten carbide [HW]

Machine / Application
- finger jointing lines Grecon
- for scoring of solid woods

Design
- 6 countersunk pin holes on both sides each
- for clockwise and counter-clockwise rotation
- tooth configuration: alternate top bevel “WS”
- cutting material: HW HL Board 06

Advantages

Notes
- along and accross the grain, from below

Ø D	B	b	Ø d	Z	NL	Hook angle	Corner◁		Ident-No.
200	7,0	4.0	75	48	2x6/6,5/95	10	10	Grecon	189539
[mm]	[mm]	[mm]	[mm]			[°]	[°]		

105350

Scoring Saw Blades HW “ES” - for finger joint machines

Product

Drawing

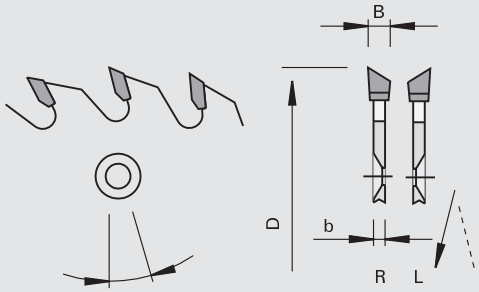

LEUCO topline

LEUCO DUR

tungsten carbide [HW]

MEC

Machine / Application
- finger jointing lines Grecon-Combipact
- for scoring of solid woods

Design
- tooth configuration: top bevel “ES (right + left)”
- cutting material: HW HL Board 06

Advantages

Notes
- along and accross the grain, from above and below
- sense of rotation see drawing

Ø D	B	b	Ø d	Z	NL	Hook angle	Corner◁		Ident-No. [L]	Ident-No. [R]
200	5,1	3.5	75	48	6/7/95	10	25	Grecon-Compipact	188947	188948
200	4,7	3.4	75	64	6/6,6/95	10	30	Grecon HS 120	189034	189035
200	6,0	4.0	75	48	6/6,5/95	10	5	Grecon	189540	
[mm]	[mm]	[mm]	[mm]			[°]	[°]			

105355

Scoring Saw Blade Set HW „ES“ - for finger joint machines

Product

Drawing

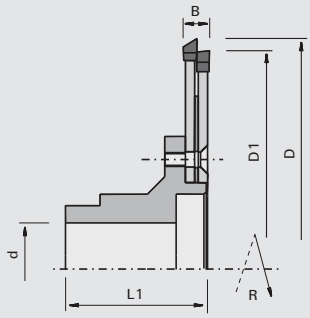

LEUCO DUR

tungsten carbide [HW]

MEC

Machine / Application
- finger jointing lines Grecon Ultra / Profi Joint
- for scoring of solid woods

Design
- tooth configuration: top bevel "ES"
- cutting material: HW HL Board 06

Advantages

Notes
- along and accross the grain, from below
- sense of rotation according to DIN-EN 50144

Ø D1	Ø D	B	L1	Ø d	Z	DKN		Ident-No. [R]
190	200	11,6	61	40	48+48	12x3,3	Grecon Ultra / Profi Joint	189536 &
[mm]	[mm]	[mm]	[mm]	[mm]		[mm]		

Spare parts	Dimension	Class-No.	Ident-No.
Scoring Saw Blades	Ø200x6,0/4,0xØ75 Z48	105350	189537
Scoring Saw Blades	Ø190x6,0/4,0xØ75 Z48	105350	189538
Bushings for Grecon	Ø115x61xØ40DKN	997370	189543
Spacers	Ø150x1,5xØ75	955520	189542
Countersunk Flat Headed Screws	M6x20 DIN 7991-8.8	995121	183114
Screwdrivers	SW4x100	985730	166091
	[mm]		

105311

Scoring Saw Blades HW “F” - for hoggers and flange

Product

Drawing

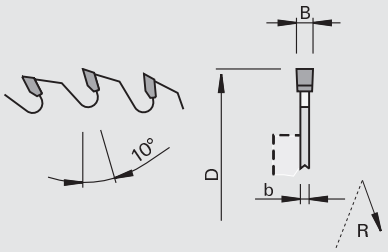

tungsten carbide [HW]

MEC

Machine / Application

- double end tenoners with scoring / hogging unit
- for chip-free scoring of raw, melamine-, paper-, HPL-laminated, foiled and veneered panels

Design

- tooth configuration: flat “F”
- cutting material: HW HL Board 06

Advantages

Notes

- application with feed
- for flange Ident-No. L 164770 R 164758 for LEUCO S-System
- for flange Ident-No. 006480 for Homag, Brandt, IMA motor shaft Ø 30 DKW
- flanges see chapter “Clamping Systems”
- included in delivery: saw blade without flange
- sense of rotation acc. to DIN-EN 50144

Ø D	B	b	Ø d	Z	NL	Ident-No. [L]	Ident-No. [R]
180	3,2	2.2	65	36	6/6,5/90	188266	188267
180	3,2	2.2	65	48	6/6,5/90	188268	188269
180	3,2	2.2	65	54	6/6,5/90	188270	188271
[mm]	[mm]	[mm]	[mm]				

Complete sets with flange	Ø D	Z		Class-No.	Ident-No. [L]	Ident-No. [R]
	180	36	Homag, Brandt, IMA	105011	160656 &	160655 &
	180	48	Homag, Brandt, IMA	105011	161274 &	161273 &
	180	54	Homag, Brandt, IMA	105011	161272 &	161271 &
	[mm]					

105311

Scoring Saw Blades HW “F” - for hoggers and flange 160849

Product

Drawing

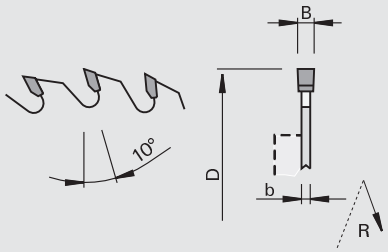

tungsten carbide [HW]

MEC

Machine / Application

- double end tenoners with scoring / hogging unit
- for chip-free scoring of raw, melamine-, paper-, HPL-laminated, foiled and veneered panels

Design

- tooth configuration: flat “F”
- cutting material: HW HL Board 06

Advantages

Notes

- application with feed
- for flange Ident-No.160849 for LEUCO S-System
- flanges see chapter “Clamping Systems”
- included in delivery: saw blade without flange
- sense of rotation acc. to DIN-EN 50144

Ø D	B	b	Ø d	Z	NL	Ident-No.
180	3,2	2.2	50	36	3/22/80	188263
180	3,2	2.2	50	48	3/22/80	188264
180	3,2	2.2	50	54	3/22/80	188265
200	3,2	2.2	50	42	3/22/80	188272 &
200	3,2	2.2	50	64	3/22/80	188273
[mm]	[mm]	[mm]	[mm]			

105311

Scoring Saw Blades HW “F” - for hoggers

Product

Drawing

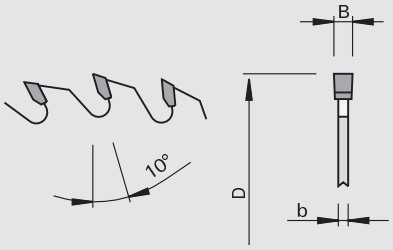

tungsten carbide [HW]

MEC

Machine / Application

- double end tenoners with scoring / hogging unit
- for chip-free scoring of raw, melamine-, paper-, HPL-laminated, foiled and veneered panels

Design

- tooth configuration: flat “F”
- cutting material: HW HL Board 06

Advantages

Notes

- application with feed

Ø D	B	b	Ø d	Z	NL	Ident-No.
150	3,2	2.2	30	36		188295
150	3,2	2.2	40	36		188255 &
150	3,2	2.2	40	48		188256
150	3,2	2.2	55	36		188274
180	3,2	2.2	30	36		188257
180	3,2	2.2	30	54		188259
200	3,2	2.2	30	42		188260
200	3,2	2.2	60	64		188276
[mm]	[mm]	[mm]	[mm]			

105320

Scoring Saw Blades HW “WS” - for hoggers

Product

Drawing

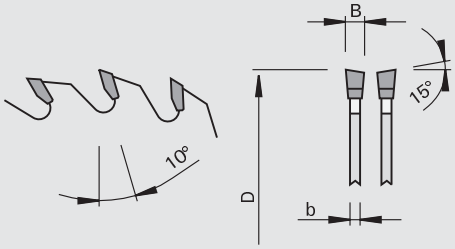

tungsten carbide [HW]

MEC

Machine / Application

- double end tenoners with scoring / hogging unit
- for chip-free scoring of raw, melamine-, paper-, HPL-laminated, foiled and veneered panels

Design

- tooth configuration: ATB “WS”
- cutting material: HW HL Board 06

Advantages

Notes

- application with feed

Ø D	B	b	Ø d	Z	Ident-No.
150	3,2	2.2	30	48	188292
180	3,2	2.2	30	54	188293
200	3,2	2.2	30	64	188294
[mm]	[mm]	[mm]	[mm]		

205241

DIAMAX Scoring Saw Blades DP „F-FA“ - for hoggers and flange 160849

Product

Drawing

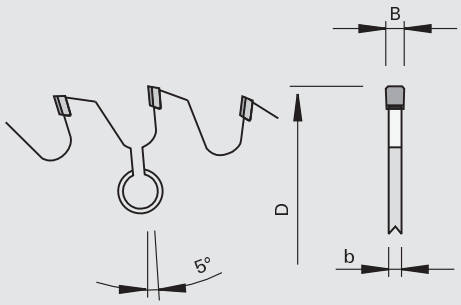

LEUCO DIAMAX

polycrystalline diamond [DP]

MEC

Machine / Application

- double end tenoners
- edge trimming machines
- for chip-free scoring of raw, melamine-, paper-, HPL-laminated, foiled and veneered panels

Design

- tooth configuration: flat with two-sided chamfer "F-FA"
- n max = 10,000 min-1
- reduced resharpenable area

Advantages

- long edge lives
- low purchase price thanks to large-scale manufacturing

Notes

- application with feed
- the specified feed rates are based on n = 6,000 min-1
- for flange Ident-No.160849 for LEUCO S-System

Ø D	B	b	Ø d	Z	NL	Recommended feed	Ident-No.
180	3,2	2.2	50	24	3/22/80	20	173712 s
180	3,2	2.2	50	28	3/22/80	25	173716
180	3,2	2.2	50	32	3/22/80	30	173720
[mm]	[mm]	[mm]	[mm]			[m/min]	

205241

DIAMAX Scoring Saw Blades DP „F-FA“ - for hoggers and flange 006480

Product

Drawing

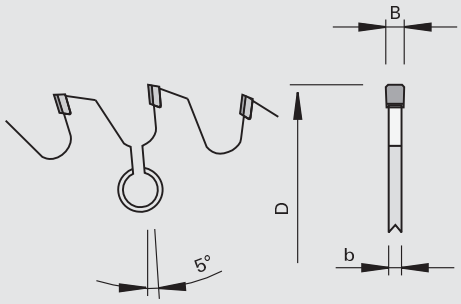

LEUCO DIAMAX

polycrystalline diamond [DP]

MEC

Machine / Application

- double end tenoners
- edge trimming machines
- for chip-free scoring of raw, melamine-, paper-, HPL-laminated, foiled and veneered panels

Design

- tooth configuration: flat with two-sided chamfer "F-FA"
- n max = 10,000 min-1
- reduced resharpenable area

Advantages

- long edge lives
- low purchase price thanks to large-scale manufacturing

Notes

- application with feed
- the specified feed rates are based on n = 6,000 min-1
- for flange Ident-No. 006480 for Homag, Brandt, IMA for LEUCO S-System

Ø D	B	b	Ø d	Z	NL	Recommended feed	Ident-No.
180	3,2	2.2	65	24	6/6,5/90	20	173714
180	3,2	2.2	65	32	6/6,5/90	30	173722
[mm]	[mm]	[mm]	[mm]			[m/min]	

205041

Scoring Saw Blades DP „F-FA“ - for hoggers

Product

Drawing

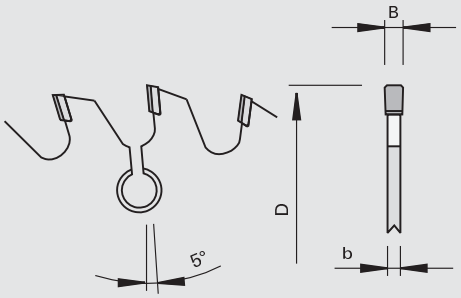

polycrystalline diamond [DP]

MEC

Machine / Application

- double end tenoners
- edge trimming machines
- for chip-free scoring of raw, melamine-, paper-, HPL-laminated, foiled and veneered panels

Design

- tooth configuration: flat with two-sided chamfer "F-FA"
- resharpenable area 4 mm

Advantages

- long edge lives

Notes

- application with feed
- the specified feed rates are based on n = 6,000 min-1

Ø D	B	b	Ø d	Z	Recommended feed	Ident-No.
150	3,2	2.2	55	28	25	169322 s
180	3,2	2.2	30	48	50	169338 s
180	3,2	2.2	30	44	45	169335 s
180	3,2	2.2	30	40	40	169332 s
180	3,2	2.2	30	36	35	169329 s
180	3,2	2.2	30	32	30	169327 s
180	3,2	2.2	30	28	25	169326 s
180	3,2	2.2	30	24	20	169325 s
150	3,2	2.2	55	32	30	169323 s
150	3,2	2.2	55	24	20	169321 s
200	3,2	2.2	30	24	20	169341 s
150	3,2	2.2	60	36	35	170173 s
150	3,2	2.2	55	36	35	169324 s
150	3,2	2.2	60	28	25	170171 s
150	3,2	2.2	60	32	30	170172 s
200	3,2	2.2	30	28	25	169343 s
150	3,2	2.2	60	24	20	170170 s
200	3,2	2.2	30	48	50	169353 s
200	3,2	2.2	30	44	45	169351 s
200	3,2	2.2	30	40	40	169349 s
200	3,2	2.2	30	36	35	169347 s
200	3,2	2.2	30	32	30	169345 s
[mm]	[mm]	[mm]	[mm]		[m/min]	

205041

Scoring Saw Blades DP „F-FA“ - for hoggers and flange 160849

Product

Drawing

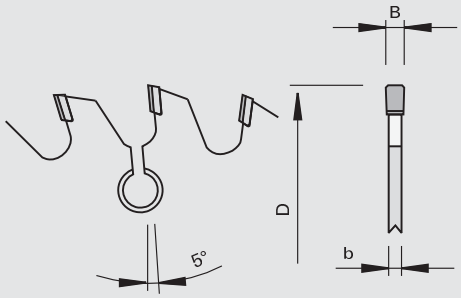

LEUCO DIA

polycrystalline diamond [DP]

MEC

Machine / Application

- double end tenoners
- edge trimming machines
- for chip-free scoring of raw, melamine-, paper-, HPL-laminated, foiled and veneered panels

Design

- tooth configuration: flat with two-sided chamfer "F-FA"
- resharpenable area 4 mm

Advantages

- long edge lives

Notes

- application with feed
- the specified feed rates are based on n = 6,000 min-1
- for flange Ident-No.160849 for LEUCO S-System

Ø D	B	b	Ø d	Z	NL	Recommended feed	Ident-No.
180	3,2	2.2	50	24	3/22/80	20	168905 s
180	3,2	2.2	50	28	3/22/80	25	168907 s
180	3,2	2.2	50	32	3/22/80	30	168909 s
180	3,2	2.2	50	36	3/22/80	35	169330 s
180	3,2	2.2	50	40	3/22/80	40	169333 s
180	3,2	2.2	50	44	3/22/80	45	169336 s
180	3,2	2.2	50	48	3/22/80	50	169339 s
200	3,2	2.2	50	24	3/22/80	20	169342 s
200	3,2	2.2	50	28	3/22/80	25	169344 s
200	3,2	2.2	50	32	3/22/80	30	169346 s
200	3,2	2.2	50	36	3/22/80	35	169348 s
200	3,2	2.2	50	40	3/22/80	40	169350 s
200	3,2	2.2	50	44	3/22/80	45	169352 s
200	3,2	2.2	50	48	3/22/80	50	169354 s
[mm]	[mm]	[mm]	[mm]			[m/min]	

205041

Scoring Saw Blades DP „F-FA“ - for hoggers and flange 006480

Product

Drawing

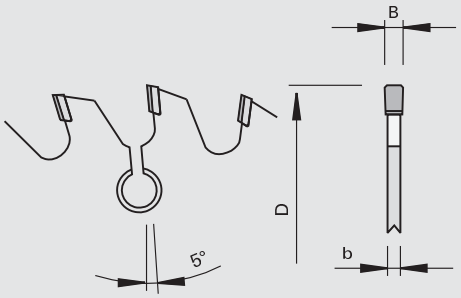

LEUCO DIA

polycrystalline diamond [DP]

MEC

Machine / Application

- double end tenoners
- edge trimming machines
- for chip-free scoring of raw, melamine-, paper-, HPL-laminated, foiled and veneered panels

Design

- tooth configuration: flat with two-sided chamfer "F-FA"
- resharpenable area 4 mm

Advantages

- long edge lives

Notes

- application with feed
- the specified feed rates are based on n = 6,000 min-1
- for flange Ident-No. 006480 for Homag, Brandt, IMA for LEUCO S-System

Ø D	B	b	Ø d	Z	NL	Recommended feed	Ident-No.
180	3,2	2.2	65	24	6/5,5/90	20	168906
180	3,2	2.2	65	28	6/5,5/90	25	168908 s
180	3,2	2.2	65	32	6/6,5/90	30	169328 s
180	3,2	2.2	65	36	6/5,5/90	35	169331 s
180	3,2	2.2	65	40	6/6,5/90	40	169334 s
180	3,2	2.2	65	44	6/5,5/90	45	169337 s
180	3,2	2.2	65	48	6/6,5/90	50	169340 s
[mm]	[mm]	[mm]	[mm]			[m/min]	

102312

Sizing Saw Blades HW “F” - for hoggers

Product

Drawing

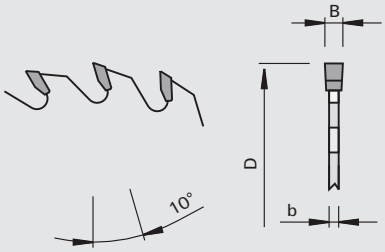

LEUCO topline

LEUCO DUR

tungsten carbide [HW]

MEC

Machine / Application

- double end tenoners
- for sizing cuts in raw and laminated panels

Design

- tooth configuration: flat “F”
- cutting material: HW HL Board 06

Advantages

Notes

-

Ø D	B	b	Ø d	Z	Tooth geometry	Ident-No.
250	4,0	2.8	80	54	flat without cut out	188248
250	4,0	2.8	80	78	flat without cut out	188249
255	4,0	2.8	60	60	flat without cut out	188251
255	4,0	2.8	80	60	flat without cut out	188253 &
[mm]	[mm]	[mm]	[mm]			

102312

Sizing Saw Blades HW “F” - for high-tech hoggers

Product

Drawing

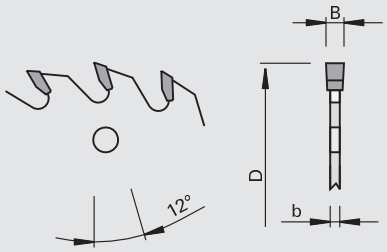

tungsten carbide [HW]

MEC

Machine / Application
- double end tenoners
- for sizing cuts in raw and laminated panels

Design
- tooth configuration: flat “F”
- cutting material: HW HL Board 06

Advantages

Notes
-

Ø D	B	b	Ø d	Z	NL	Tooth geometry	Ident-No.
250	4,0	2.8	100	72	6/6,5/172	flat with 6 cut out	188245
[mm]	[mm]	[mm]	[mm]				

102312

Sizing Saw Blades HW for TwinTec Hoggers “F”

Product

Drawing

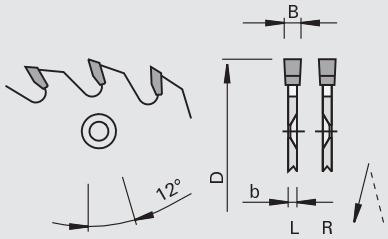

tungsten carbide [HW]

MEC

Machine / Application
- double end tenoners
- edge trimming machines
- for sizing cuts in laminated and raw panels

Design
- tooth configuration: flat “F”
- cutting material: HW HL Board 06

Advantages

Notes
- sense of rotation see drawing

Ø D	B	b	Ø d	Z	NL	Ident-No. [L]	Ident-No. [R]
220	4,0	2.8	80	48	6/6/154	169820	169819
220	4,0	2.8	80	60	6/6/154	169818	169817
[mm]	[mm]	[mm]	[mm]				

202062

Circular Saw Blades DP for TwinTec Hoggers „ES-FA“

Product

Drawing

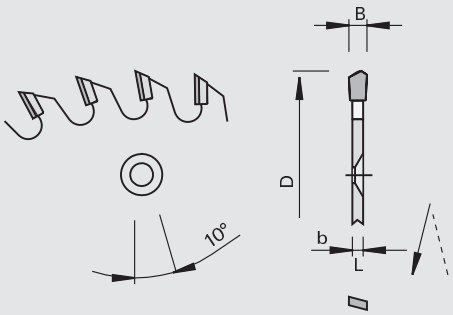

LEUCO DIA

polycrystalline diamond [DP]

MEC

Machine / Application

- double end tenoners
- edge trimming machines
- for chip-free sizing of raw, melamine-, paper-, HPL-laminated, foiled and veneered panels

Design

- tooth configuration: top bevel with chamfer and face shear "ES-FA"
- n max = 7,200 min-1
- resharpenable area 4 mm; sides of teeth can be resharpened
- saw blade with equal tooth pitch

Advantages

- decreased downtimes thanks to long edge lives

Notes

- application with feed
- for scoring/hogging (RZ) and double hogging (DZ) process
- for combination with LEUCO TwinTec hoggers
- the specified feed rates are based on n = 6,000 min-1
- sense of rotation see drawing

Ø D	B	b	Ø d	Z	Feed RZ	Feed DZ	Ident-No. [L]	Ident-No. [R]
220	4	2.8	80	24	15	25	171353 s	171354 s
220	4	2.8	80	30	20	32,5	171355 s	171356 s
220	4	2.8	80	36	25	40	171357	171358
220	4	2.8	80	42	27,5	45	171359 s	171360 s
220	4	2.8	80	48	30	50	171361 s	171362 s
220	4	2.8	80	54	35	55	171363 s	171364 s
220	4	2.8	80	60	40	60	171365	171366 s
[mm]	[mm]	[mm]	[mm]		[m/min]	[m/min]		

115205

Hogger Rings HW for TwinTec Hoggers

Product

Drawing

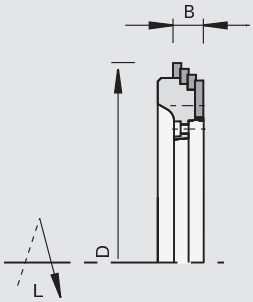

LEUCO DUR

tungsten carbide [HW]

MEC

Machine / Application

- for chip-free sizing during the cross-cutting process

Design

- hogger teeth positioned in a stepped cut configuration
- segments Z= 1 solid tungsten carbide with shear angle

Advantages

Notes

- sense of rotation see drawing

Ø D	B	Z	Ident-No. [L]	Ident-No. [R]
239	18,4	4x6	172304 s	172303 s
[mm]	[mm]			

Spare parts	Dimension	Class-No.	Ident-No.
Screwdrivers	T20x100	985730	166092
Head Cap Screws	M5x12 T20	995115	171237
	[mm]		

150501

segments VHW for TwinTec hogger

Product

Drawing

LEUCO DUR

Solid Tungsten Carbide

Machine / Application
- for use in TwinTec Hogger Ring

Design
- Z = 1 VHW
- with shear angle

Advantages

Notes
- one set consists of 6 segments
- completely tipped for circular cut: 12 segments / stepped cut: 24 segments

			Ident-No. [L]	Ident-No. [R]
			171232	171233
Spare parts	Dimension		Class-No.	Ident-No.
Countersunk Flat Headed Screws	M5x13,5 T20		995125	171238
Screwdrivers	T20x100		985730	166092
	[mm]			

232921

Segments for TwinTec Hogger DP-tipped

Product

Drawing

LEUCO DIA

polycrystalline diamond [DP]

Machine / Application
- for use in TwinTec Hogger Ring

Design
- Z = 1 DP-tipped
- with shear angle

Advantages

Notes
- one set consists of 6 segments
- completely tipped for circular cut: 12 segments / stepped cut: 24 segments

			Ident-No. [L]	Ident-No. [R]
			171234	171235
Spare parts	Dimension		Class-No.	Ident-No.
Countersunk Flat Headed Screws	M5x13,5 T20		995125	171238
Screwdrivers	T20x100		985730	166092
	[mm]			

997300

Hogger Flanges for TwinTec Hoggers

Product

Drawing

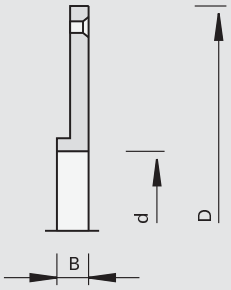

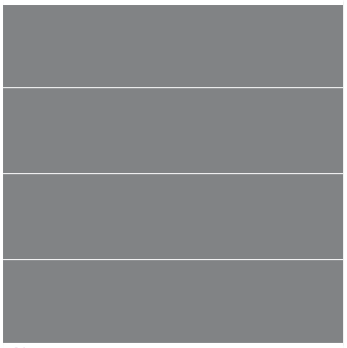

Machine / Application

- for attaching the hogger saw blades

Design

Advantages

Notes

- during the double hogging process the saw is attached to the flange by screws
- included in delivery: flange, countersunk screws M5x16 mm

Ø D	B	Ø d	Ident-No.
170	12	60	171367 s
[mm]	[mm]	[mm]	

Spare parts		Dimension	Class-No.	Ident-No.
Countersunk Flat Headed Screws	for attaching the saw blade without flange	M5x10 T20	995125	171236
Countersunk Flat Headed Screws	for attaching the flange	M5x16 T20	995125	164839
Screwdrivers		T20x100	985730	166092
		[mm]		

Application example

Hogging

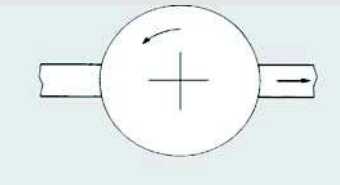

Double hogging

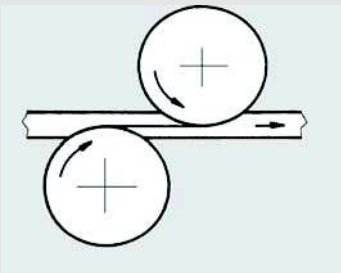

Folding Hogging

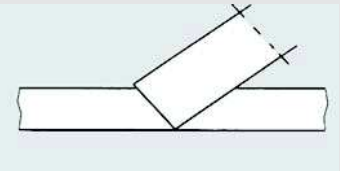

Scoring / Hogging

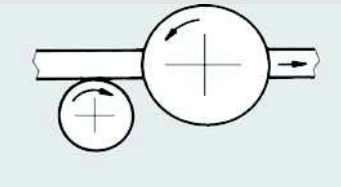

Order / Inquiry for Special Tools: Hoggers

Please copy and send the completed form to one of the LEUCO sales offices. (Only one tool description per form)

Customer-no.: _____
Company: _____
Plant: _____
Street: _____
Zip / City: _____
Country: _____
Contact partner: _____
Phone:
City and Date: _____

Order: o
Inquiry: o

Delivery (week no.): _____
(Not binding)
No. of pieces: _____

Fax:
Signature: _____

Machine

Make: _____
Model: _____
Type: _____
Operating RPM [min-1]: _____
Feed rate [m/min]: _____
Flange diameter [mm]: _____
Motor output (hogger motor) [kW]: _____
Mode of application:

Hogger: Against feed: o
With feed: o

Mode of application: Hogging o
Scoring / Hogging o
Double hogging o

Workpiece

Description: _____
Material thickness [mm]: _____
Hogging width [mm]: _____
Cutting quality: Rough hogging o
Finish hogging o
Folding o
Circular cut o
Stepped cut o
Direction of cut: With grain o
(Solid wood) Across grain o

Coating

Yes o No o
Description: _____
Further Information _____

Tool

Compact Hoggers o
Segment Hoggers o
TwinTec Hoggers o
Radius hogger o
Other: o

Cutting diameter D [mm] _____
Hogging width [mm]: _____
No. of teeth [pcs.]:
Circular Saw Blade _____
No. x no. of segment teeth _____ x _____

Sense of rotation Right o Left o

Interface

Bushing:
Double keyway Width Height
Keyway Width Height
Hydro Bushing: _____
Hydro-S-System: _____
S-System: _____
Other: _____

Cutting material

Circular Saw Blade Carbide o
Diamond o
Segments: Carbide o
Diamond o

o Check if applicable

Tool drawing:

517-01.0708