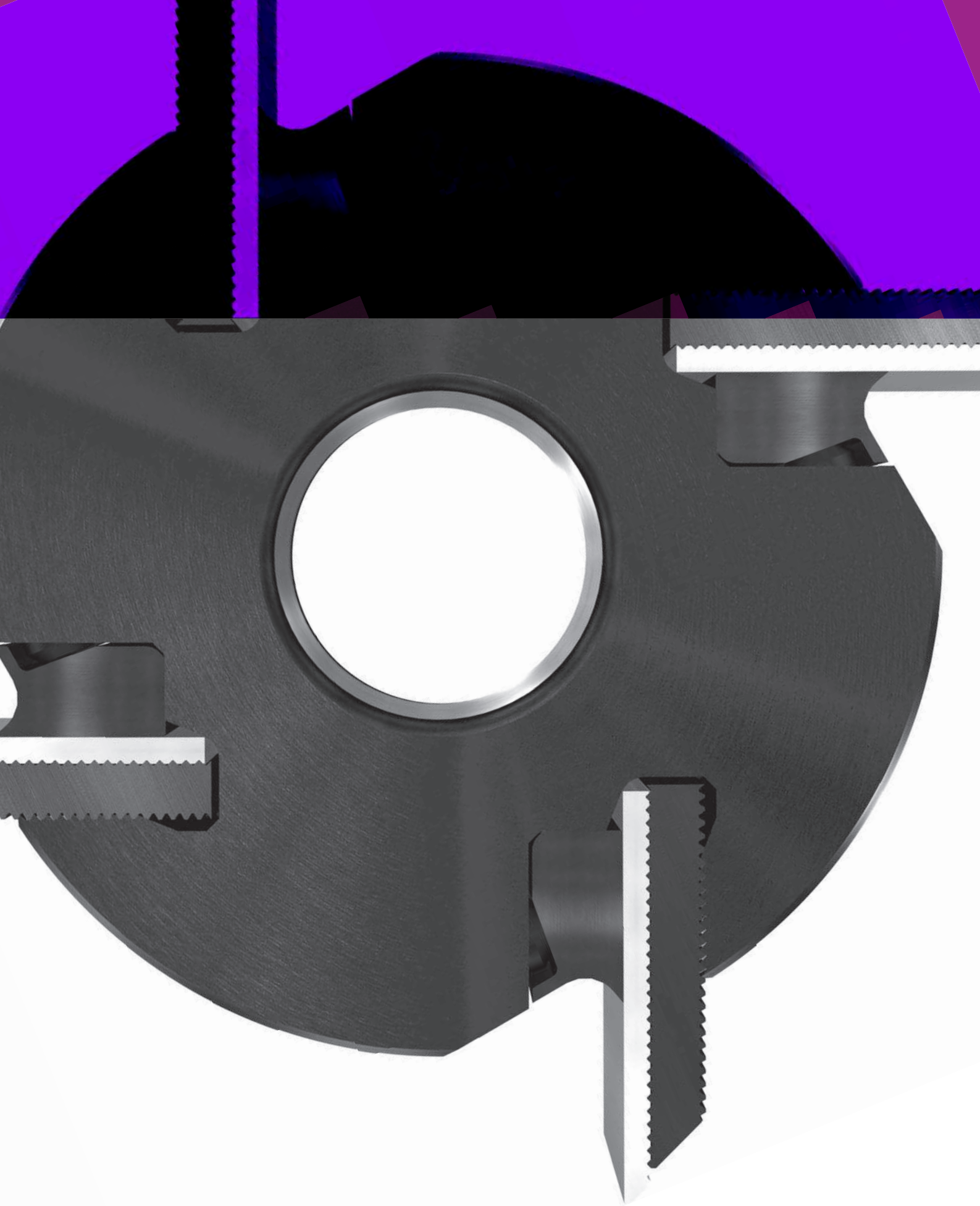

LEUCO

Cutters with Bore

122110

Edge Jointing Cutters two-part version - IMA (BIMA)

Product

Drawing

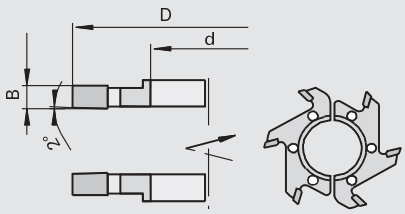

tungsten carbide [HW]

MEC

Machine / Application

- edge banding machines IMA model BIMA with glueing device / flush cutting unit 6135
- for jointing and flush-cutting of solid wood, veneer and plastic edge bands

Design

- cutting edges parallel to cutter axis
- two part version
- countersunk on both sides
- n max = 18,000 min-1

Advantages

Notes

- sense of rotation see drawing

Ø D	B	b	Ø d	Z		Ident-No. [L]	Ident-No. [R]
70	6	6	30	6	IMA (BIMA)	716658 s	716657 s
[mm]	[mm]	[mm]	[mm]				

122110

Edge Jointing Cutters HW

Product

Drawing

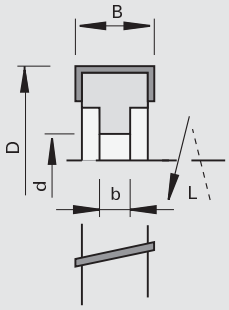

tungsten carbide [HW]

MEC

Machine / Application

- edge banding machines
- for jointing and flush-cutting of solid wood, veneer and plastic edge bands

Design

- with shear angle
- n max = 18,000 min-1

Advantages

Notes

- sense of rotation according to DIN-EN 50144

Ø D	B	b	Ø d	Z	DKN	Shear◁		Ident-No. [L]	Ident-No. [R]
70	25	10.5	16	4	5x2,3	10	Homag	180796 s	180795 s
100	25	15	30	4		15		160647 s	160109 s
[mm]	[mm]	[mm]	[mm]		[mm]	[°]			

122112

Edge Jointing Cutters HW - SCM-Stefani

Product

Drawing

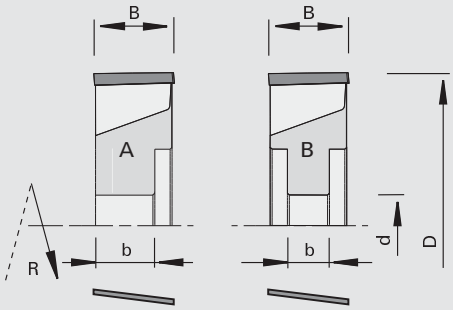

LEUCO DUR

tungsten carbide [HW]

MEC

Machine / Application

- edge banding machines SCM-Stefani with ED-System
- for jointing and flush-cutting of solid wood, veneer and plastic edge bands

Design

- with shear angle
- n max = 18,000 min-1

Advantages

Notes

- sense of rotation according to DIN-EN 50144

Ø D	B	b	Ø d	Z	DKN	Shear◁	Type		Ident-No. [L]	Ident-No. [R]
70	20	14.5	16	4	5x2,3	12	A	SCM-Stefani-RSK	182985 s	182986 s
75	20	10.5	16	4	5x2,3	12	A	SCM-Stefani-RSP	182989 s	182990 s
[mm]	[mm]	[mm]	[mm]		[mm]	[°]				

Ø D	B	b	Ø d	Z	DKN	Shear◁	Type		Ident-No. [L]	Ident-No. [R]
75	30	11	16	4	5x2,3	12	B	SCM-Stefani-RSP	182991 s	182992 s
80	20	11	16	4	5x2,3	12	B	SCM-Stefani-R	182617 s	182618 s
[mm]	[mm]	[mm]	[mm]		[mm]	[°]				

222210

DIAMAX Edge Jointing Cutters DP - SCM-Stefani

Product

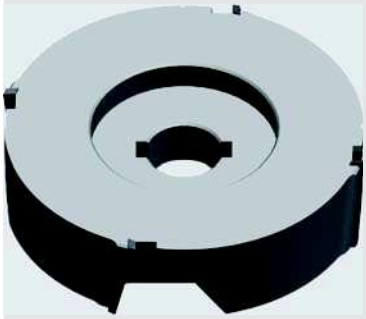

Drawing

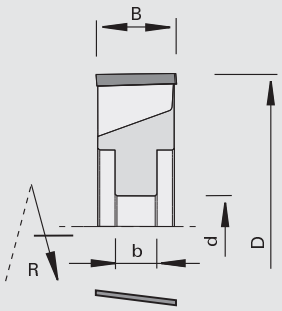

LEUCO DIAMAX

polycrystalline diamond [DP]

MEC

Machine / Application

- edge banding machines SCM-Stefani with ED-System
- for jointing and flush-cutting of solid wood, veneer and plastic edge bands

Design

- with shear angle
- reduced resharpenable area
- n max = 23,800 min -1

Advantages

Notes

- sense of rotation according to DIN-EN 50144

Ø D	B	b	Ø d	Z	DKN	Shear◁		Ident-No. [L]	Ident-No. [R]
80	20	11	16	4	5x2,3	12	SCM-Stefani	182976 s	182975 s
[mm]	[mm]	[mm]	[mm]		[mm]	[°]			

222510

DIAMAX Edge Jointing Cutters CM DP - SCM-Stefani

Product

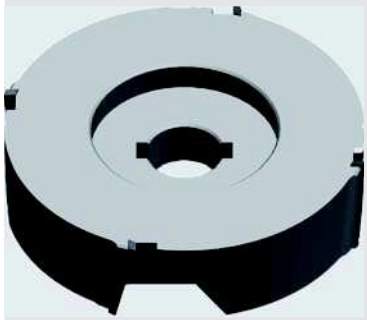

Drawing

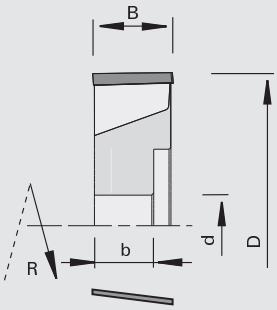

LEUCO topline

LEUCO DIAMAX

polycrystalline diamond [DP]

MEC

Machine / Application

- edge banding machines SCM Stefani with ED-System
- for jointing and flush-cutting of solid wood, veneer and plastic edge bands

Design

- with shear angle
- n max = 24,000 min-1

Advantages

- optimized chip removal thanks to ChipMeister version
- less chips remain inside of the machine
- no malfunctions due to chips
- reduced suction performance
- low noise level

Notes

- sense of rotation according to DIN-EN 50144

Ø D	B	b	Ø d	Z	DKN	Shear∢		Ident-No. [L]	Ident-No. [R]
70	10	14.5	16	4	5x2,3	12	SCM-Stefani-RSK	182979 s	182980 s
70	20	14.5	16	4	5x2,3	12	SCM-Stefani-RSK	182977 s	182978 s
75	20	10.5	16	4	5x2,3	12	SCM-Stefani-RSP	182981 s	182982 s
[mm]	[mm]	[mm]	[mm]		[mm]	[°]			

222510

DIAMAX Edge Jointing Cutters CM DP - SCM-Stefani

Product

Drawing

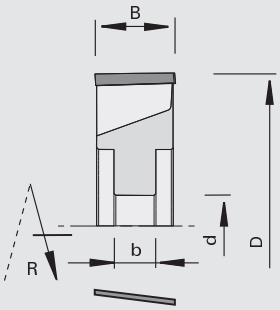

LEUCO topline

LEUCO DIAMAX

polycrystalline diamond [DP]

MEC

Machine / Application

- edge banding machines SCM Stefani with ED-System
- for jointing and flush-cutting of solid wood, veneer and plastic edge bands

Design

- with shear angle
- n max = 24,000 min-1

Advantages

- optimized chip removal thanks to ChipMeister version
- less chips remain inside of the machine
- no malfunctions due to chips
- reduced suction performance
- low noise level

Notes

- sense of rotation according to DIN-EN 50144

Ø D	B	b	Ø d	Z	DKN	Shear∢		Ident-No. [L]	Ident-No. [R]
75	30	11	16	4	5x2,3	12	SCM-Stefani-RSP	182983 s	182984 s
[mm]	[mm]	[mm]	[mm]		[mm]	[°]			

122110

Edge Jointing Cutters CM HW - HOLZ-HER

Product

Drawing

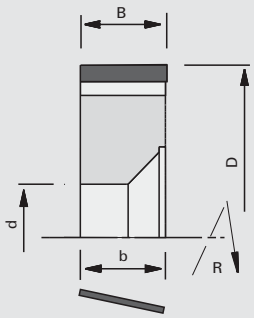

LEUCO DUR

tungsten carbide [HW]

MEC

Machine / Application
- edge banding machines HOLZ-HER
- for jointing and flush-cutting of solid wood, veneer and plastic edge bands

Design
- with shear angle

Advantages
- optimized chip removal thanks to ChipMeister version
- less chips remain inside of the machine
- no malfunctions due to chips
- reduced suction performance
- low noise level

Notes
- sense of rotation according to DIN-EN 50144

Ø D	B	b	Ø d	Z	DKN	Shear∢	nmax		Ident-No. [L]	Ident-No. [R]
50	18	17	20	2	5x2,2	10	24000	HOLZ-HER-1828	183113 s	183112 s
[mm]	[mm]	[mm]	[mm]		[mm]	[°]	[min-1]			

122110

Edge Jointing Cutter CM HW- HOLZ-HER 1828 - AirStream-System

Product

Drawing

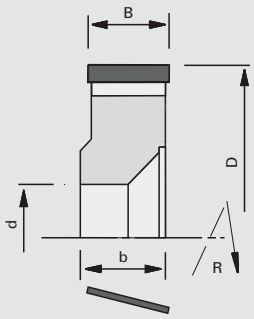

AIR STREAM

LEUCO DUR

tungsten carbide [HW]

MEC

Machine / Application
- edge banding machines HOLZ-HER aggregate 1828
- for jointing and flush-cutting of solid wood, veneer and plastic edge bands

Design
- with shear angle
- AirStream-System
- ChipMeister

Advantages
- improved chip removal thanks to ChipMeister version and AirStream-System
- less chips remain inside of the machine
- no malfunctions due to chips
- reduction of suction power
- low noise level

Notes
- sense of rotation according to DIN-EN 50144

Ø D	B	b	Ø d	Z	DKN	Shear∢	nmax		Ident-No. [L]	Ident-No. [R]
70	18	19	20	4	5x2,3	10	18000	HOLZ-HER-1828	184747	184746
[mm]	[mm]	[mm]	[mm]		[mm]	[°]	[min-1]			

222810

Edge Jointing Cutter CM DP - HOLZ-HER 1826 - AirStream-System

Product

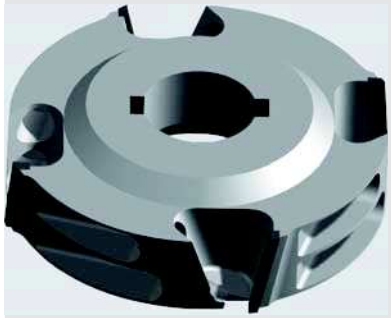

Drawing

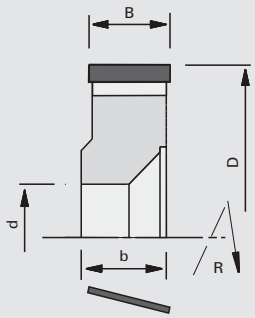

AIR STREAM

LEUCO DIA

polycrystalline diamond [DP]

MEC

Machine / Application
- edge banding machines HOLZ-HER aggregate 1826
- for for jointing and flush-cutting of solid wood, veneer and plastic edge bands

Design
- with shear angle
- polished face and high-finish clearance angle
- Air-Stream-System
- ChipMeister
- n max = 18,000 min-1

Advantages
- improved chip removal thanks to ChipMeister version and AirStream-System
- less chips remain inside of the machine
- no malfunctions due to chips
- reduction of suction power
- low noise level

Notes
- sense of rotation according to DIN-EN 50144

Ø D	B	b	Ø d	Z	DKN	Shear∢	nmax		Ident-No. [L]	Ident-No. [R]
70	18	19	20	4	5x2,2	12	18000	HOLZ-HER 1826	184749 s	184748 s
70	19	20	20	4	5x2,2	12	18000	HOLZ-HER 1826	184751 s	184750 s
[mm]	[mm]	[mm]	[mm]		[mm]	[°]	[min-1]			

122115

Edge Jointing Cutters HW - Brandt

Product

Drawing

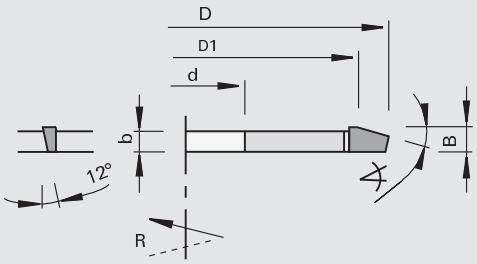

LEUCO DUR

tungsten carbide [HW]

MAN

Machine / Application
- edge banding machines
- for flush-cutting and chamfering of solid wood, veneer and plastic edge bands

Design
- with shear angle
- n = 8,100 - 13,800 min-1

Advantages

Notes
- sense of rotation according to DIN-EN 50144

Chamfer∢	Ø D1	Ø D	B	b	Ø d	Z	Shear∢		Ident-No. [L]	Ident-No. [R]
15	60	66	4	3	16	6	12	Brandt	819482 s	819481 s
16		96	5,8	5	40	12	12	Brandt	164658 s	164657 s
[°]	[mm]	[mm]	[mm]	[mm]	[mm]		[°]			

122100

Edge Jointing Cutters HW - IMA

Product

Drawing

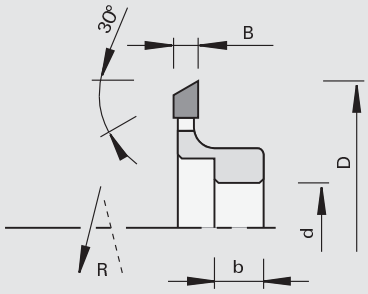

tungsten carbide [HW]

MEC

Machine / Application
- edge banding machines
- for flush-cutting and chamfering of solid wood, veneer and plastic edge bands

Design
- cutting edges parallel to cutter axis
- n max = 18,000 min-1

Advantages

Notes
- sense of rotation see drawing

Ø D	B	b	Ø d	Z	DKN		Ident-No. [L]	Ident-No. [R]
73	6	12	20	12	6x3,5	IMA	171240	171239
[mm]	[mm]	[mm]	[mm]		[mm]			

120100

Edge Jointing Cutterheads HW

Product

Drawing

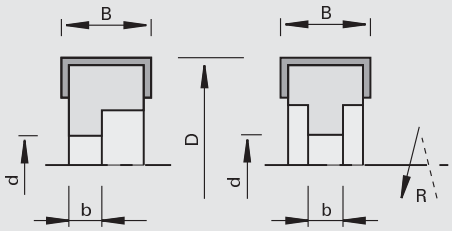

tungsten carbide [HW]

MEC

Machine / Application
- edge banding machines
- for jointing and flush-cutting of solid wood, veneer and plastic edge bands

Design
- cutting edges parallel to cutter axis
- cutting material: HW HL Board 05
- n max = 18,000 min-1

Advantages

Notes
- sense of rotation according to DIN-EN 50144

Ø D	B	b	Ø d	Z	DKN		Ident-No. [L]	Ident-No. [R]
50	12	10	16	4	5x2,3	Sudhoff, EBM, Ney		167258
50	12	10	16	2	5x2,3	Homag, Homburg		164066
50	15	10	16	4	5x2,3	EBM		179139
50	15	10	16	2	5x2,3	IMA, Raimann		164067
61	12	10	16	3	5x2,3	Homag		167899 s
61	20	11	16	3	5x2,3	Homag		167900 s
70	12	10	16	6	5x2,3	Brandt, Homag		164073
70	12	10	16	4	5x2,3	Brandt, Homag		164068
70	20	11	16	2	5x2,3	Reich		182077 s
70	20	11	16	4	5x2,3	Homag, Homburg, Biesse Akron 400 RS 502		164071
70	20	20	16	4	5x2,3	Ott		164069
70	20	12.5	20	6	2/6x3,5	IMA, SCM-IDM	164134 s	164080 s
70	20	12.5	20	4	6x3,5	Brandt, Homag	164133 s	164079 s
70	20	11	20	4	6x3,5	HOLZ-HER		164070 s
80	40	25	30	4	8x3,3	HOLZ-HER		164072
[mm]	[mm]	[mm]	[mm]		[mm]			

Turnover Knives	B	H	S	Class-No.	Ident-No.
	12	12	1.5	150515	003080
	15	12	1.5	150515	003081
	20	12	1.5	150515	003082
	40	12	1.5	150515	164078
	[mm]	[mm]	[mm]		

Spare parts	Dimension	For Ident-No.	Class-No.	Ident-No.
Clamping Bars	B=10	164066, 164067, 164068, 164073, 167258, 167899, 179139	925300	164526
Clamping Bars	B=18	164069, 164070, 164071, 164079, 164080, 164133, 164134, 167900, 182077	925300	164076
Clamping Bars	B=39	164072	925300	164077
Set Screws	M6x10 DIN EN ISO 4028	164066, 164067, 164068, 164073, 167258, 167899, 179139	995161	180002
Set Screws	M6x12 DIN EN ISO 4028	164069, 164070, 164071, 164072, 164079, 164080, 164133, 164134, 167900, 182077	995161	180214
Screwdrivers	SW3x100		985730	166090
Cranked Wrench Keys	SW3 DIN ISO 2936		985730	009672
	[mm]			

120100

Edge Jointing Cutterheads HW - HOLZ-HER

Product

Drawing

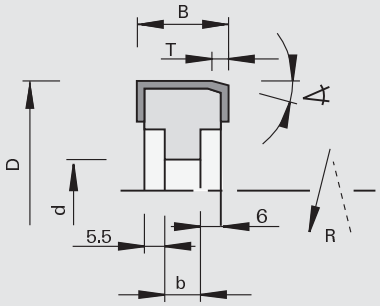

tungsten carbide [HW]

MEC

Machine / Application

- edge banding machines HOLZ-HER
- for jointing and flush-cutting of solid wood, veneer and plastic edge bands

Design

- cutting edges parallel to cutter axis
- cutting material: HW HL Board 06
- n max = 18,000 min-1

Advantages

Notes

- sense of rotation according to DIN-EN 50144

Chamfer∢	Ø D	B	b	Ø d	T	Z		Ident-No. [L]	Ident-No. [R]
15	70	29,5	17	20	5	4	HOLZ-HER	164462 s	164463 s
[°]	[mm]	[mm]	[mm]	[mm]	[mm]				

Turnover Knives	B	H	S	Class-No.	Ident-No.
for counter-clockwise rotation	29,5	12	1.5	150515	160618
for clockwise rotation	29,5	12	1.5	150515	160118
	[mm]	[mm]	[mm]		

Spare parts	Dimension	Class-No.	Ident-No.
Clamping Bars	B=30	925300	164185
Set Screws	M6x12 DIN EN ISO 4028	995161	180214
Screwdrivers	SW3x100	985730	166090
	[mm]		

120101

Edge Jointing Cutterheads HW - Homag

Product

Drawing

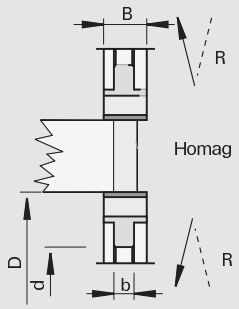

LEUCO DUR

tungsten carbide [HW]

MEC

Machine / Application

- edge banding machines
- for jointing and flush-cutting of solid wood, veneer and plastic edge bands

Design

- cutting edges parallel to cutter axis
- cutting material: HW HL Board 05
- n max = 18,000 min-1

Advantages

Notes

- sense of rotation according to DIN-EN 50144

Ø D	B	b	Ø d	Z	DKN		Ident-No.
70	14,3	10	16	4	5x2,3	Homag	170247
70	20	10	16	4	5x2,3	Homag	168510 s
[mm]	[mm]	[mm]	[mm]		[mm]		

Turnover Knives	B	H	S	Class-No.	Ident-No.
	14,3	14.3	2.5	150518	170248
	20	14.3	2.5	150518	168509
	[mm]	[mm]	[mm]		

Spare parts	Dimension	Class-No.	Ident-No.
Countersink Screws	M5x10,8 T15	995125	180840
Screwdrivers	T15x100	985730	180470
	[mm]		

120101

Edge Jointing Cutterheads HW - IMA

Product

Drawing

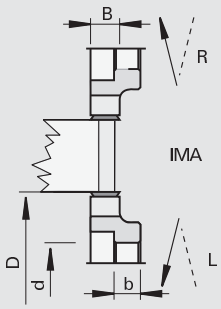

LEUCO DUR

tungsten carbide [HW]

MEC

Machine / Application

- edge banding machines
- for jointing and flush-cutting of solid wood, veneer and plastic edge bands

Design

- cutting edges parallel to cutter axis
- cutting material: HW HL Board 05
- n max = 18,000 min-1

Advantages

Notes

- sense of rotation according to DIN-EN 50144

Ø D	B	b	Ø d	Z	DKN		Ident-No. [L]	Ident-No. [R]
70	14,3	13	20	4	6x3,5	IMA	172717 s	172718 s
[mm]	[mm]	[mm]	[mm]		[mm]			

Turnover Knives	B	H	S	Class-No.	Ident-No.
	14,3	14.3	2.5	150518	170248
	[mm]	[mm]	[mm]		

Spare parts	Dimension	Class-No.	Ident-No.
Countersink Screws	M5x10,8 T15	995125	180840
Screwdrivers	T15x100	985730	180470
	[mm]		

222510

DIAMAX Edge Jointing Cutters DP - Brandt, Homag, SCM-IDM, IMA

Product

Drawing

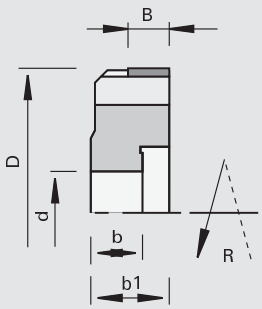

LEUCO topline

LEUCO DIAMAX

polycrystalline diamond [DP]

MEC

Machine / Application

- edge banding machines
- for jointing and flush-cutting of solid wood, veneer and plastic edge bands

Design

- polished face and high-finish clearance angle
- reduced resharpenable area
- straight cutter axis
- n max = 24,000 min-1

Advantages

- optimum cutting quality thanks to high concenctric accuracy and precise tool balancing

Notes

- sense of rotation according to DIN-EN 50144

Ø D	B	b	b1	Ø d	Z	DKN	Ident-No. [L]	Ident-No. [R]
70	10	12.5	19	20	4	6x3,5	175787 s	175786 s
70	10	12.5	19	20	6	6x3,5	175789 s	175788 s
[mm]	[mm]	[mm]	[mm]	[mm]		[mm]		

222510

DIAMAX Edge Jointing Cutters DP - Brandt, Homag, Biesse

Product

Drawing

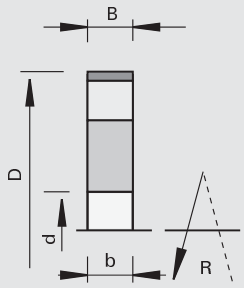

polycrystalline diamond [DP]

MEC

Machine / Application
- edge banding machines
- Biesse Akron 400 RS 502
- for jointing and flush-cutting of solid wood, veneer and plastic edge bands

Design
- polished face and high-finish clearance angle
- reduced resharpening area 2.0 mm
- straight cutter axis
- n max = 24,000 min-1

Advantages
- optimum cutting quality thanks to high concenctric accuracy and precise tool balancing

Notes
-

Ø D	B	b	Ø d	Z	DKN	Ident-No.
70	10	10	16	4	5x2,3	175779
70	10	10	16	6	5x2,3	175780
[mm]	[mm]	[mm]	[mm]		[mm]	

122110

Edge Jointing Cutters HW HSK 25R - Homag, IMA

Product

Drawing

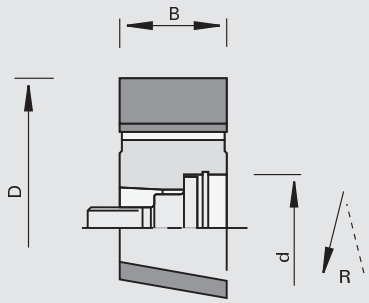

tungsten carbide [HW]

MEC

Machine / Application
- edge banding machines Homag, IMA
- for flush-cutting and chamfe-ring of solid wood, veneer and plastic edge bands

Design
- with shear angle
- n max = 24,000 min-1

Advantages
- optimum cutting quality thanks to high concenctric accuracy and precise tool balancing

Notes
- sense of rotation according to DIN-EN 50144

Ø D	B	Ø d	Z	Ident-No. [L]	Ident-No. [R]
70	25	HSK 25R	4	177590 #	177589 #
70	35	HSK 25R	4	178035 s	178034 s
[mm]	[mm]	[mm]			

Spare parts	Dimension	Class-No.	Ident-No.
Screws	M10x1,25x32 SW8	995190	177780
Shim Rings	18x25x1,0 DIN 988	995440	177781
Locking Rings	25x1,2 DIN 472	995460	177782
	[mm]		

122110

Edge Jointing Cutters CM HW HSK 25R - Homag

Product

Drawing

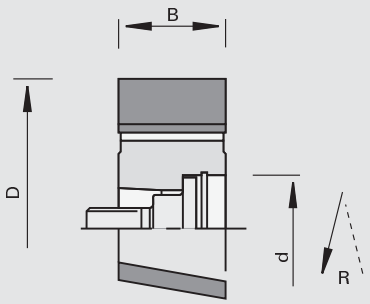

tungsten carbide [HW]

MEC

Machine / Application

- edge banding machines Homag
- for flush-cutting and chamfering of solid wood, veneer and plastic edge bands

Design

- with shear angle
- n max = 24,000 min-1

Advantages

- optimum cutting quality thanks to high concenctric accuracy and precise tool balancing
- optimized chip removal thanks to internal chip evacuation
- less chips remain inside of the machine
- no malfunctions due to chips
- reduction of suction power
- noise reduced

Notes

- sense of rotation according to DIN-EN 50144

Ø D	B	Ø d	Z	Ident-No. [L]	Ident-No. [R]
70	25	HSK 25R	4	180765	180766
[mm]	[mm]	[mm]			

Spare parts	Dimension	Class-No.	Ident-No.
Screws	M10x1,25x32 SW8	995190	177780
Shim Rings	18x25x1,0 DIN 988	995440	177781
Locking Rings	25x1,2 DIN 472	995460	177782
	[mm]		

120101

Edge Jointing Cutterheads HW HSK 25R - Homag, IMA

Product

Drawing

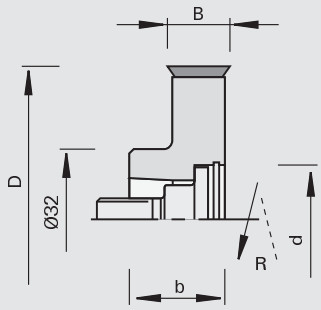

LEUCO DUR

tungsten carbide [HW]

MEC

Machine / Application

- edge banding machines Homag, IMA
- for flush-cutting and chamfering of solid wood, veneer and plastic edge bands

Design

- cutting edges parallel to cutter axis, with 4 cutting edges
- cutting material: HW HL Solid 15
- n max = 18,000 min-1

Advantages

- excellent cutting quality thanks to high radial running accuracy and precise tool balancing

Notes

- sense of rotation according to DIN-EN 50144

Ø D	B	b	Ø d	Z	Ident-No. [L]	Ident-No. [R]
70	14,3	23	HSK 25R	4	177592	177591
[mm]	[mm]	[mm]	[mm]			

Turnover Knives	B	H	S	Class-No.	Ident-No.
	14,3	14.3	2.5	150518	170248
	[mm]	[mm]	[mm]		

Spare parts	Dimension	Class-No.	Ident-No.
Countersink Screws	M5x10,8 T15	995125	180840
Screwdrivers	T15x100	985730	180470
Screws	M10x1,25x32 SW8	995190	177780
Shim Rings	18x25x1,0 DIN 988	995440	177781
Locking Rings	25x1,2 DIN 472	995460	177782
	[mm]		

222510

DIAMAX-Edge Jointing Cutters DP HSK 25R - Homag, IMA

Product

Drawing

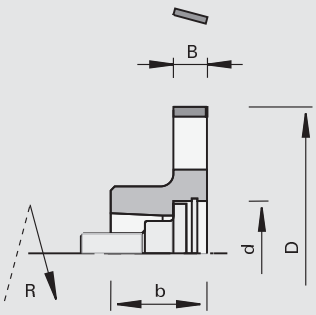

polycrystalline diamond [DP]

MEC

Machine / Application

- edge banding machines Homag, IMA
- for flush-cutting and chamfering of solid wood, veneer and plastic edge bands

Design

- polished face and high-finish clearance angle
- with shear angle
- n max = 24,000 min-1

Advantages

- optimum cutting quality thanks to high concenctric accuracy and precise tool balancing
- low purchase price thanks to large-scale manufacturing

Notes

- not resharpenable because constant (zero) diameter must be maintained
- sense of rotation according to DIN-EN 50144

Ø D	B	b	Ø d	Z	Ident-No. [L]	Ident-No. [R]
70	8	23	HSK 25R	4	177651	177652
70	15	23	HSK 25R	4	177653	177654
70	8	23	HSK 25R	6	180492	180493
70	15	23	HSK 25R	6	180494 s	180495 s
[mm]	[mm]	[mm]	[mm]			

Spare parts	Dimension	Class-No.	Ident-No.
Screws	M10x1,25x32 SW8	995190	177780
Shim Rings	18x25x1,0 DIN 988	995440	177781
Locking Rings	25x1,2 DIN 472	995460	177782
	[mm]		

222812

Edge Jointing Cutters DP HSK 25R - Homag, IMA

Product

Drawing

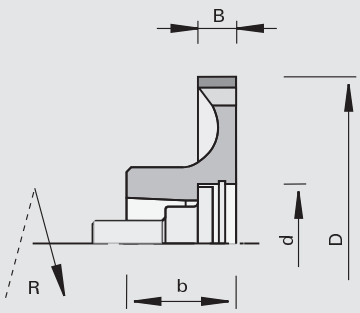

LEUCO topline

LEUCO i-system

polycrystalline diamond [DP]

MEC

Machine / Application

- edge banding machines Homag, aggregate FF and finish milling, IMA
- for flush-cutting and chamfering of solid wood, veneer and plastic edge bands

Design

- polished face and high-finish clearance angle
- with shear angle

Advantages

- highest concentricity
- optimized chip removal thanks to internal chip evacuation
- less chips remain inside of the machine
- no malfunctions due to chips
- reduction of suction power
- noise reduced
- low purchase price thanks to large-scale manufacturing

Notes

- Z = 4 for feed rate 20 - 30 m/min
- Z = 6 for feed rate 30 - 45 m/min
- Z = 8 for feed rate 45 - 60 m/min
- machines must be equipped with i-system
- constant basic dimensions
- sense of rotation according to DIN-EN 50144

Ø D	B	b	Ø d	Z	Ident-No. [L]	Ident-No. [R]
70	8,5	22.2	HSK 25R	4	180648	180649
70	8,5	22.2	HSK 25R	6	180650 s	180651 s
70	8,5	22.2	HSK 25R	8	180652 s	180653 s
70	15	23	HSK 25R	4	180934 s	180935 s
70	15	23	HSK 25R	6	180936 s	180937 s
70	8	23	HSK 25R	4	181176	181177
70	8	23	HSK 25R	6	181178	181179
70	8	23	HSK 25R	8	181180 s	181181 s
[mm]	[mm]	[mm]	[mm]			

Spare parts	Dimension	Class-No.	Ident-No.
Screws	M10x1,25x32 SW8	995190	177780
Shim Rings	18x25x1,0 DIN 988	995440	177781
Locking Rings	25x1,2 DIN 472	995460	177782
	[mm]		

122110

Edge Rounding / Chamfering Cutters HW one-part version - IMA (BIMA)

Product

Drawing

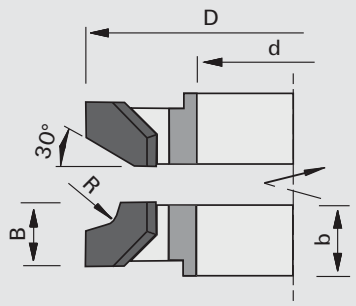

tungsten carbide [HW]

MEC

Machine / Application

- edge banding machines IMA model BIMA with glueing device / flush cutting unit 6135
- for flush-cutting and rounding or chamfering of solid wood, veneer and plastic edge bands

Design

- with shear angle
- one part version
- n max = 18,000 min-1

Advantages

Notes

- sense of rotation according to DIN-EN 50144

R	Chamfer◁	Ø D	B	b	Ø d	Z		Ident-No. [L]	Ident-No. [R]
1,0		65	10	10.7	30	6	IMA (BIMA)	192419	192418
1,5		65	10	10.7	30	6	IMA (BIMA)	184351	184352
2,0		65	10	10.7	30	6	IMA (BIMA)	184353	184354
3,0		65	10	10.7	30	6	IMA (BIMA)	184355	184356
	30	65	10	10.7	30	6	IMA (BIMA)	184357	184358
[mm]	[°]	[mm]	[mm]	[mm]	[mm]				

122110

Edge Chamfering Cutters HW two-part version - IMA (BIMA)

Product

Drawing

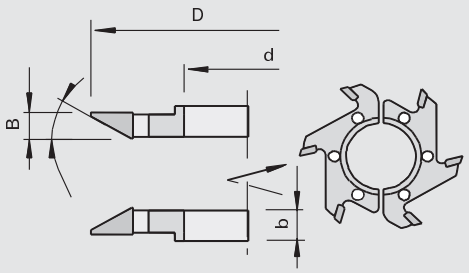

tungsten carbide [HW]

MEC

Machine / Application

- edge banding machines IMA model BIMA with glueing device / flush cutting unit 6135
- for flush-cutting and chamfering of solid wood, veneer and plastic edge bands

Design

- with shear angle
- two part version
- n max = 18,000 min-1

Advantages

Notes

- sense of rotation see drawing

Chamfer◁	Ø D	B	b	Ø d	Z		Ident-No. [L]	Ident-No. [R]
30	70	9	9	30	6	IMA (BIMA)	180164	180163
[°]	[mm]	[mm]	[mm]	[mm]				

122110

Edge Rounding Cutters HW two-part version - IMA (BIMA)

Product

Drawing

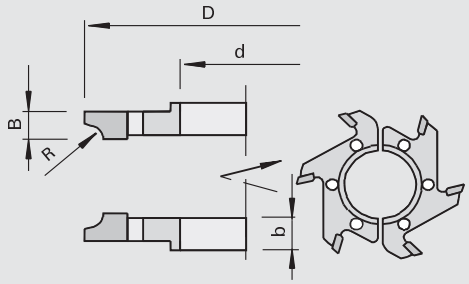

tungsten carbide [HW]

MEC

Machine / Application

- edge banding machines IMA model BIMA with glueing device / flush cutting unit 6135
- for rounding and flush-cutting of solid wood, veneer and plastic edge bands

Design

- two part version
- with shear angle
- n max = 18,000 min-1

Advantages

Notes

- sense of rotation see drawing

R	Ø D	B	b	Ø d	Z		Ident-No. [L]	Ident-No. [R]
2	70	6	6	30	6	IMA (BIMA)	180155 s	180156 s
2	70	9	9	30	6	IMA (BIMA)	180157	180158
3	70	9	9	30	6	IMA (BIMA)	180167	180168
[mm]	[mm]	[mm]	[mm]	[mm]				

120102

Edge Chamfering Cutterheads HW for machining centers - Homag

Product

Drawing

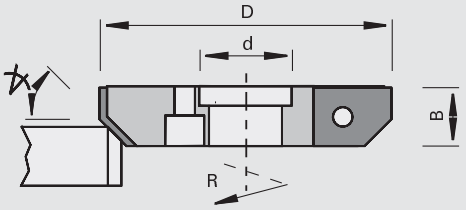

tungsten carbide [HW]

MEC

Machine / Application

- machining center Homag
- for flush-cutting and chamfering of solid wood, veneer and plastic edge bands

Design

- cutting edges parallel to cutter axis
- cutting material: HW HL Board 05
- n max = 18,000 min-1

Advantages

Notes

- sense of rotation according to DIN-EN 50144

Chamfer∢	Ø D	B	Ø d	Z	Ident-No. [L]	Ident-No. [R]
5	60	12	19	3	179207 s	179206 s
15	60	12	19	3	178634 s	178633 s
30	60	13,5	19	3	178632	178631
45	60	12	19	3	178630 s	178629 s
[°]	[mm]	[mm]	[mm]			

Knives	Chamfer∢	B	H	S	Class-No.	Ident-No. [L]	Ident-No. [R]
	5	12	16	2	151545	179174	179173
	15	12	16	2	151545	177042	177045
	30	13,5	16	2	151545	177043	177046
	45	12	16	2	151545	177822	177823
	[°]	[mm]	[mm]	[mm]			

Spare parts	Dimension	Class-No.	Ident-No.
Clamping Bars	B=12	925300	178759
Magnetic Stops	0,0	997800	016613
Set Screws	M6x12 DIN EN ISO 4028	995161	180214
Screwdrivers	SW3x100	985730	166090
	[mm]		

120101

Edge Chamfering Cutterheads HW for machining centers (particularly for thin edge bands) - Homag

Product

Drawing

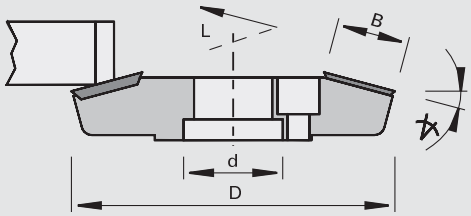

LEUCO DUR

tungsten carbide [HW]

MEC

Machine / Application

- machining center Homag
- for flush-cutting and chamfering of solid wood, veneer and plastic edge bands

Design

- cutting edges parallel to cutter axis
- cutting material: HW HL Board 05
- n max = 18,000 min-1

Advantages

Notes

- especially for thin edge bands
- sense of rotation according to DIN-EN 50144

Chamfer∢	Ø D	B	Ø d	Z	Ident-No. [L]	Ident-No. [R]
15	62	14	19	3	178640	178639
[°]	[mm]	[mm]	[mm]			

Knives	B	H	S	Class-No.	Ident-No.
Spurs	14	14	2	150559	003079
	[mm]	[mm]	[mm]		

Spare parts	Dimension	Class-No.	Ident-No.
Countersunk Flat Headed Screws	M5x6 T20	995125	176199
Screwdrivers	T20x100	985730	166092
	[mm]		

120102

Edge Rounding Cutterheads HW for machining centers - Homag

Product

Drawing

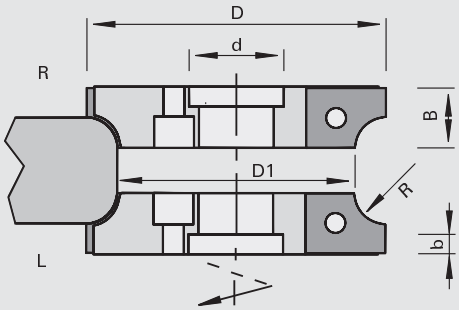

tungsten carbide [HW]

MEC

Machine / Application

- machining center Homag
- for rounding of solid wood, veneer and plastic edge bands

Design

- cutting edges parallel to cutter axis
- cutting material: HW HL Board 06
- n max = 18,000 min-1

Advantages

Notes

- same cutterhead body for R 1.5 - 3 mm; R 4 - 5 mm
- included in delivery: 3 additional spare knives
- sense of rotation according to DIN-EN 50144

R	Ø D	Ø D1	B	b	Ø d	Z	Ident-No. [L]	Ident-No. [R]
1	59	50	15	4	19	3	185197 &	185198 &
1,5	59	50	15	4	19	3	185199 &	185200 &
2	59	50	15	4	19	3	180749 &	180748 &
2,5	59	50	15	4	19	3	185201 &	185202 &
3	59	50	15	4	19	3	180751 &	180750 &
4	63	50	15	4	19	3	178795 s	178794 s
5	63	50	15	4	19	3	178797 s	178796 s
[mm]	[mm]	[mm]	[mm]	[mm]	[mm]			

Knives	R	B	H	S	Class-No.	Ident-No. [L]	Ident-No. [R]
	1	13	15	2	151546	180722	180721
	1,5	13	15	2	151546	181954	181953
	2	13	15	2	151546	181956	181955
	2,5	13	15	2	151546	180728	180727
	4	14	17	2	151545	177036 s	177040 s
	5	15	17	2	151545	177037	177041
	[mm]	[mm]	[mm]	[mm]			

Spare parts	Dimension	Class-No.	Ident-No.
Clamping Bars	B=12	925300	178759
Set Screws	M6x12 DIN EN ISO 4028	995161	180214
Screwdrivers	SW3x100	985730	166090
Magnetic Stops	1,0	997800	166094
Magnetic Stops	0,0	997800	016613
	[mm]		

222512

DIAMAX Edge Rounding Cutters DP - Homag

Product

Drawing

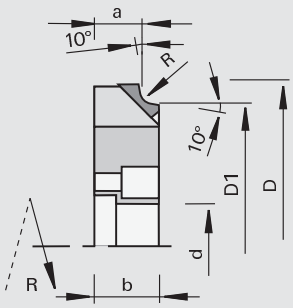

LEUCO topline

LEUCO DIAMAX

polycrystalline diamond [DP]

MEC

Machine / Application
- machining center Homag
- for rounding of solid wood, veneer and plastic edge bands

Design
- polished face
- high-finish clearance angle
- with shear angle
- n max = 24,000 min-1

Advantages
- optimum cutting quality

Notes
- constant basic dimensions a and D1
- sense of rotation according to DIN-EN 50144

R	Ø D	Ø D1	a	b	Ø d	Z	NL	Ident-No. [L]	Ident-No. [R]
2	57	50	11	14	15	3	3/4,2/25	179416	179417
3	57	50	11	14	15	3	3/4,2/25	179418 s	179419 s
[mm]	[mm]	[mm]	[mm]	[mm]	[mm]				

120120

Edge Chamfering Cutterheads HW - Homag

Product

Drawing

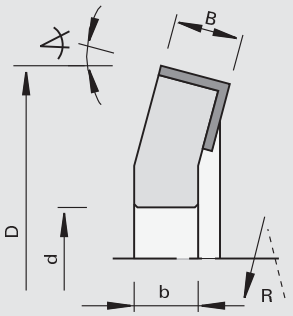

LEUCO DUR

tungsten carbide [HW]

MEC

Machine / Application
- edge banding machines Homag
- for flush-cutting and chamfering of solid wood, veneer and plastic edge bands

Design
- cutting edges parallel to cutter axis
- cutting material: HW HL Board 05
- n max = 18,000 min-1

Advantages

Notes
- sense of rotation according to DIN-EN 50144

Chamfer∢	Ø D	B	b	Ø d	Z	DKN		Ident-No. [L]	Ident-No. [R]
15	65	12	11	16	3	5x2,3	Homag	167735	167734
[°]	[mm]	[mm]	[mm]	[mm]		[mm]			

Turnover Knives	B	H	S	Class-No.	Ident-No.
	12	12	1.5	150515	003080
	[mm]	[mm]	[mm]		

Spare parts	Dimension	Class-No.	Ident-No.
Clamping Bars	B=10	925300	164526
Set Screws	M6x12 DIN EN ISO 4028	995161	180214
Screwdrivers	SW3x100	985730	166090
	[mm]		

120102

Edge Rounding Cutterheads HW - Homag Softforming

Product

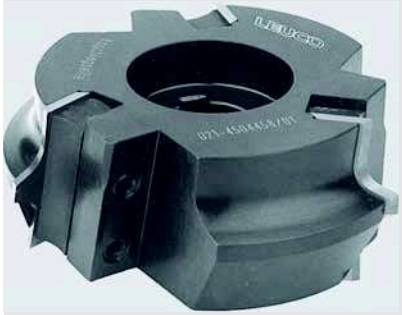

Drawing

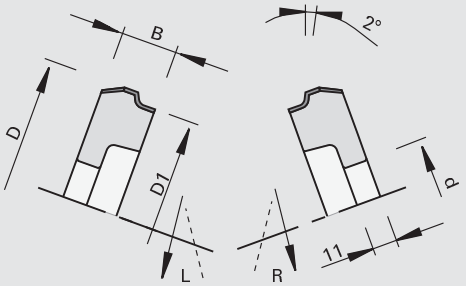

LEUCO DUR

tungsten carbide [HW]

MEC

Machine / Application

- edge banding machines Homag during the softforming process
- for rounding of solid wood, veneer and plastic edge bands

Design

- with shear angle
- cutting material: HW HL Board 05
- n max = 18,000 min-1

Advantages

Notes

- same cutterhead body for R 2 - 3 mm; R 5 - 8 mm
- sense of rotation see drawing

R	Ø D	Ø D1	B	b	Ø d	Z	DKN	Ident-No. [L]	Ident-No. [R]
2	75	66	20,5	11	16	3	5x2,3	163079 s	163080 s
3	75	66	20,5	11	16	3	5x2,3	163081 &	163082 &
5	80	66	30	11	16	3	5x2,3	163085 &	163086 &
6	80	66	30	11	16	3	5x2,3	163087 &	163088 &
8	80	66	30	11	16	3	5x2,3	163091 s	163092 s
[mm]	[mm]	[mm]	[mm]	[mm]	[mm]		[mm]		

Knives	R	B	H	S	Class-No.	Ident-No.
	2	20,5	15	2	151545	163062 s
	3	20,8	15	2	151545	163063
	5	30	17	2	151545	163065
	6	30,5	17	2	151545	163066
	8	30,5	17	2	151545	163068 s
	[mm]	[mm]	[mm]	[mm]		

Spare parts	Dimension	For Ident-No.	Class-No.	Ident-No.
Clamping Bars	B=18	163079, 163080, 163081, 163082	925300	163077
Clamping Bars	B=27,6	163085, 163086, 163087, 163088, 163089, 163090, 163091, 163092	925300	163078
Set Screws	M6x12 DIN EN ISO 4028		995161	180214
Screwdrivers	SW3x100		985730	166090
Cranked Wrench Keys	SW3 DIN ISO 2936		985730	009672
Magnetic Stops	0,0		997800	016613
	[mm]			

120102

Edge Chamfering Cutterheads HW

Product

Drawing

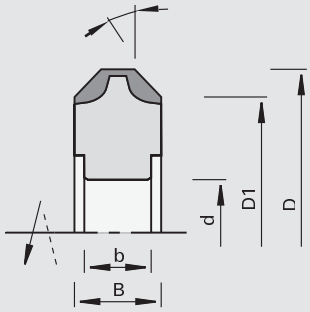

tungsten carbide [HW]

MEC

Machine / Application

- edge banding machines
- for chamfering of solid wood, veneer and plastic edge bands

Design

- cutting edges parallel to cutter axis
- cutting material: HW HL Board 05
- n max = 18,000 min-1

Advantages

Notes

- for clockwise and counter-clockwise rotation
- sense of rotation according to DIN-EN 50144

Chamfer∢	Ø D	Ø D1	B	b	Ø d	Z	DKN		Ident-No.
45	57	50	12	12	16	2	5x2,3	HOLZ-HER	171189 &
45	62	50	16	10	16	2	5x2,3	HOLZ-HER	173379 &
45	73	61	16	11	16	3	5x2,3	Homag	173380 &
45	82	70	16	11	16	4	5x2,3	Brandt	172728 &
45	73	61	16	11	20	3	6x3,5	HOLZ-HER	173381 &
45	82	70	16	11	20	4	6x3,5	IMA, Wilmsmeyer	172729 &
[°]	[mm]	[mm]	[mm]	[mm]	[mm]		[mm]		

Knives	Chamfer∢	B	H	S	Class-No.	Ident-No.
for Ø D = 57	45	12	12	1.5	151545	171190
for Ø D = 62/73/82	45	16	17.5	2	151545	169292
	[°]	[mm]	[mm]	[mm]		

Spare parts	Dimension	For Ident-No.	Class-No.	Ident-No.
Clamping Bars	12x9,5x6	171189	925300	170342
Clamping Bars		173379, 173380, 173381	925300	169246
Clamping Bars	B=15,6	172728, 172729	925300	163488
Set Screws	M6x12 DIN EN ISO 4028		995161	180214
Cranked Wrench Keys	SW2,5 DIN ISO 2936		985730	009671
Cranked Wrench Keys	SW3 DIN ISO 2936		985730	009672
Magnetic Stops	0,0		997800	016613
	[mm]			

120102

Edge Rounding Cutterheads HW

Product

Drawing

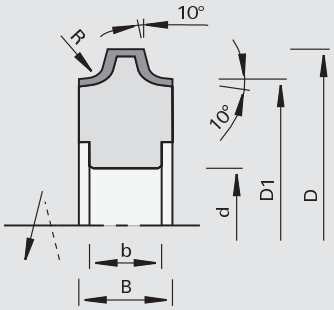

LEUCO DUR

tungsten carbide [HW]

MEC

Machine / Application

- edge banding machines
- for rounding of solid wood, veneer and plastic edge bands

Design

- cutting edges parallel to cutter axis
- cutting material: HW HL Board 05
- n max = 18,000 min-1

Advantages

Notes

- for clockwise and counter-clockwise rotation
- sense of rotation according to DIN-EN 50144

R	Ø D	Ø D1	B	b	Ø d	Z	DKN		Ident-No.
2	57	50	12	12	16	2	5x2,3	HOLZ-HER	170338 &
3	57	50	12	12	16	2	5x2,3	HOLZ-HER	170339 &
2	58	50	12	10	16	4	5x2,3	Brandt	177030
3	58	50	12	10	16	4	5x2,3	Brandt	177031 s
2	62	50	16	10	16	2	5x2,3	HOLZ-HER	179997 s
3	62	50	16	10	16	2	5x2,3	HOLZ-HER	169241
5	62	50	16	10	16	2	5x2,3	HOLZ-HER	169243 &
2	73	61	16	11	16	3	5x2,3	Homag, Ott	171128
3	73	61	16	11	16	3	5x2,3	Homag, Ott	171129
4	73	61	16	11	16	3	5x2,3	Homag, Ott	171130 &
5	73	61	16	11	16	3	5x2,3	Homag, Ott	171131 &
6	81	61	24	11	16	3	5x2,3	Homag, Ott	170254 &
8	81	61	24	11	16	3	5x2,3	Homag, Ott	170256 &
9	81	61	24	11	16	3	5x2,3	Homag, Ott	170257 &
2	78	70	16	11	16	4	5x2,3	Brandt	182086 &
2	82	70	16	11	16	4	5x2,3	Brandt	170192 &
3	82	70	16	11	16	4	5x2,3	Brandt	170193 &
4	82	70	16	11	16	4	5x2,3	Brandt	170194 &
5	82	70	16	11	16	4	5x2,3	Brandt	170195 &
2	73	61	16	11	20	3	6x3,5	HOLZ-HER	171132 &
3	73	61	16	11	20	3	6x3,5	HOLZ-HER	171133 &
4	73	61	16	11	20	3	6x3,5	HOLZ-HER	171134 &
5	73	61	16	11	20	3	6x3,5	HOLZ-HER	171135 &
2	82	70	16	11	20	4	6x3,5	IMA, Wilmsmeyer	166882 &
3	82	70	16	11	20	4	6x3,5	IMA, Wilmsmeyer	166881 &
4	82	70	16	11	20	4	6x3,5	IMA, Wilmsmeyer	166880 &
5	82	70	16	11	20	4	6x3,5	IMA, Wilmsmeyer	166879 &
[mm]	[mm]	[mm]	[mm]	[mm]	[mm]		[mm]		

Knives	R	B	H	S	Class-No.	Ident-No.
for Ø D = 62/73/82	1,5	16	17.5	2	151545	176583
for Ø D = 58	2	12	13	2	151545	177033
for Ø D = 57	2	12	12	1.5	151545	170340
for Ø D = 78	2	16	15.5	2	151545	182087
for Ø D = 62/73/82	2	16	17.5	2	151545	163489
for Ø D = 58	3	12	13	2	151545	177032
for Ø D = 57	3	12	12	1.5	151545	170341
for Ø D = 62/73/82	3	16	17.5	2	151545	163490
for Ø D = 62/73/82	4	16	17.5	2	151545	163491
for Ø D = 62/73/82	5	16	17.5	2	151545	163492
for Ø D = 81	6	24	22	2	151545	170258
for Ø D = 81	8	24	22	2	151545	170260
	[mm]	[mm]	[mm]	[mm]		

Knives	R	B	H	S	Class-No.	Ident-No.
for Ø D = 81	9	24	22	2	151545	170261 #
	[mm]	[mm]	[mm]	[mm]		

Spare parts	Dimension	For Ident-No.	Class-No.	Ident-No.
Clamping Bars	B=10,5	177030, 177031	925300	175640
Clamping Bars	12x9,5x6	170338, 170339	925300	170342
Clamping Bars		169241, 169243, 171128, 171129, 171130, 171131, 171132, 171133, 171134, 171135, 179997	925300	169246
Clamping Bars	B=15,6	166879, 166880, 166881, 166882, 170192, 170193, 170194, 170195, 182086	925300	163488
Clamping Bars	24x14,5x7	170254, 170256, 170257	925300	170262
Set Screws	M5x12 DIN EN ISO 4028	177030, 177031	995161	050565
Set Screws	M6x12 DIN EN ISO 4028	166879, 166880, 166881, 166882, 169241, 169243, 170192, 170193, 170194, 170195, 170338, 170339, 171128, 171129, 171130, 171131, 171132, 171133, 171134, 171135, 179997, 182086	995161	180214
Set Screws	M8x12 DIN EN ISO 4028	170254, 170256, 170257	995161	180001
Magnetic Stops	0,0		997800	016613
Cranked Wrench Keys	SW2,5 DIN ISO 2936		985730	009671
Cranked Wrench Keys	SW3 DIN ISO 2936		985730	009672
	[mm]			

120102

Edge Rounding Cutterheads HW - IMA

Product

Drawing

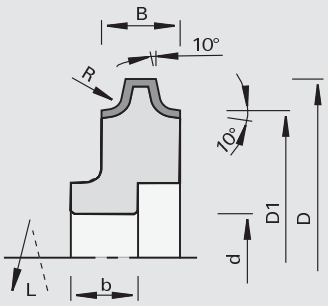

LEUCO DUR

tungsten carbide [HW]

MEC

Machine / Application

- edge banding machines IMA
- for rounding of solid wood, veneer and plastic edge bands

Design

- cutting edges parallel to cutter axis
- cutting material: HW HL Board 05
- n max = 18,000 min-1

Advantages

Notes

- same cutterhead body for R 2 - 5 mm
- sense of rotation see drawing

R	Ø D	Ø D1	B	b	Ø d	Z	DKN	Ident-No. [L]	Ident-No. [R]
2	82	70	16	13	20	4	6x3,5	168373 &	168374 &
3	82	70	16	13	20	4	6x3,5	168353 &	168354 &
4	82	70	16	13	20	4	6x3,5	168375 &	168376 &
5	82	70	16	13	20	4	6x3,5	168377 &	168378 &
[mm]	[mm]	[mm]	[mm]	[mm]	[mm]		[mm]		

Knives	R	B	H	S	Class-No.	Ident-No.
Chamfering Knives		16	17.5	2	151545	169292
Radius Knives	2	16	17.5	2	151545	163489
Radius Knives	3	16	17.5	2	151545	163490
Radius Knives	4	16	17.5	2	151545	163491
Radius Knives	5	16	17.5	2	151545	163492
	[mm]	[mm]	[mm]	[mm]		

Spare parts	Dimension	Class-No.	Ident-No.
Clamping Bars	B=15,6	925300	163488
Set Screws	M6x12 DIN EN ISO 4028	995161	180214
Cranked Wrench Keys	SW3 DIN ISO 2936	985730	009672
	[mm]		

120102

Edge Rounding Cutters HW (cranked) - IMA

Product

Drawing

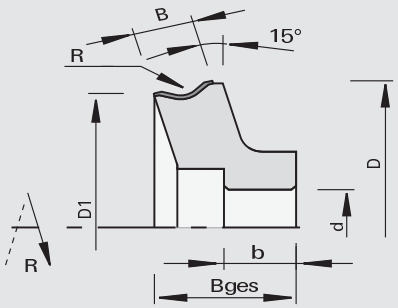

tungsten carbide [HW]

MEC

Machine / Application

- edge banding machines IMA
- for rounding of solid wood, veneer and plastic edge bands

Design

- cutting edges parallel to cutter axis
- cutting material: HW HL Board 05
- n max = 18,000 min-1

Advantages

Notes

- same cutterhead body for R 2 - 4 mm
- sense of rotation see drawing

R	Ø D	Ø D1	B	b	b1	Ø d	Z	DKN	Ident-No. [L]	Ident-No. [R]
4	77.6	70	13	13	27.9	20	4	6x3,5	172712 &	172711 &
3	77.6	70	13	13	27.9	20	4	6x3,5	172710 &	172709 &
2	77.6	70	13	13	27.9	20	4	6x3,5	172708 &	172707 &
[mm]	[mm]	[mm]	[mm]	[mm]	[mm]	[mm]		[mm]		

Knives	R	B	H	S	Class-No.	Ident-No.
	2	13	16	2	151555	172713
	3	13	16	2	151555	172714
	4	13	16	2	151555	172715 #
	[mm]	[mm]	[mm]	[mm]		

Spare parts	Dimension	Class-No.	Ident-No.
Clamping Bars	B=12	925300	162095
Set Screws	M6x12 DIN EN ISO 4028	995161	180214
Cranked Wrench Keys	SW3 DIN ISO 2936	985730	009672
	[mm]		

120102

Edge Rounding Cutterheads HW - Brandt

Product

Drawing

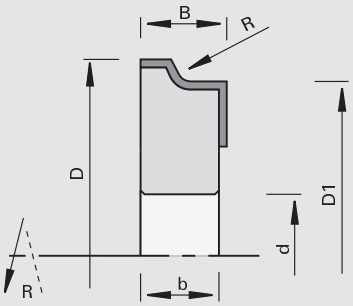

tungsten carbide [HW]

MEC

Machine / Application

- edge banding machines Brandt
- for rounding and flush-cutting of solid wood, veneer and plastic edge bands

Design

- with shear angle
- cutting material: HW HL Board 05
- n max = 18,000 min-1

Advantages

- optimum cutting quality on solid wood edges thanks to cutting edges with shear angle

Notes

- same cutterhead body for R 2 - 3 mm
- sense of rotation according to DIN-EN 50144

R	Ø D	Ø D1	B	b	Ø d	Z	DKN	Ident-No. [L]	Ident-No. [R]
2	78	70	18,5	10	16	4	5x2,3	180441 &	180440 &
3	78	70	18,5	10	16	4	5x2,3	173389 &	173388 &
[mm]	[mm]	[mm]	[mm]	[mm]	[mm]		[mm]		

Knives	R	B	H	S	Class-No.	Ident-No. [L]	Ident-No. [R]
	3	16,1	14	2	151545	178221	178220
	2	19,6	15.2	2	151545	173817	173816
	3	19,6	15.2	2	151545	173393	173392
	[mm]	[mm]	[mm]	[mm]			

Spare parts	Dimension	Class-No.	Ident-No.
Clamping Bars	B=17	925300	167971
Set Screws	M6x10 DIN EN ISO 4028	995161	180002
Cranked Wrench Keys	SW3 DIN ISO 2936	985730	009672
Magnetic Stops	0,0	997800	016613
	[mm]		

120102

Edge Rounding Cutterheads HW - Brandt, EBM, Reich

Product

Drawing

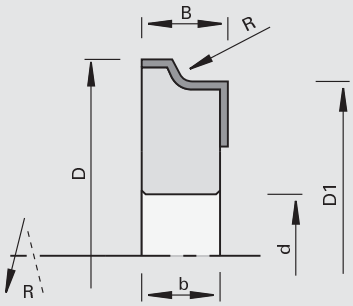

tungsten carbide [HW]

MEC

Machine / Application

- edge banding machines Brandt, EBM, Reich
- for rounding and flush-cutting of solid wood, veneer and plastic edge bands

Design

- cutting edges parallel to cutter axis
- cutting material: HW HL Board 05
- n max = 18,000 min-1

Advantages

Notes

- same cutterhead body for R 2 - 3 mm
- sense of rotation according to DIN-EN 50144

R	Ø D	Ø D1	B	b	Ø d	Z	DKN	Ident-No. [L]	Ident-No. [R]
2	56	50	15	11	16	3	5x2,3	179995	179996
2,5	56	50	15	11	16	3	5x2,3	177325 &	177326 &
3	56	50	15	11	16	3	5x2,3	177327	177328
2	56	50	12	11	16	4	5x2,3	172138	172137
3	56	50	12	11	16	4	5x2,3	172140 s	172139 s
2	56	50	16	11	16	4	5x2,3	178215 s	178214 s
[mm]	[mm]	[mm]	[mm]	[mm]	[mm]		[mm]		

Knives	R	B	H	S	Class-No.	Ident-No. [L]	Ident-No. [R]
	2	12	14.5	2	151545	172142	172141
	3	12	14.5	2	151545	172144	172143
	2	15	14.5	2	151545	177317	177318
	2,5	15	14.5	2	151545	177319	177320
	3	15	14.5	2	151545	177321	177322
	2	16,1	14	2	151545	178219	178218
	[mm]	[mm]	[mm]	[mm]			

Spare parts	Dimension	Class-No.	Ident-No.	
Clamping Bars	B=10	172137, 172138, 172139, 172140	925300	171221
Clamping Bars	B=13	177325, 177326, 177327, 177328, 179995, 179996	925300	177332
Clamping Bars	B=15	178214, 178215	925300	178213 o
Set Screws	M5x10 DIN EN ISO 4026	172137, 172138, 172139, 172140	995161	180028
Set Screws	M6x12 DIN EN ISO 4028	177325, 177326, 177327, 177328, 178214, 178215, 179995, 179996	995161	180214
Magnetic Stops	0,0	For all	997800	016613
Cranked Wrench Keys	SW2,5 DIN ISO 2936	172137, 172138, 172139, 172140	985730	009671
Cranked Wrench Keys	SW3 DIN ISO 2936	177325, 177326, 177327, 177328, 178214, 178215, 179995, 179996	985730	009672
	[mm]			

120115

Edge Rounding Cutterheads HW - EBM, Hebrock

Product

Drawing

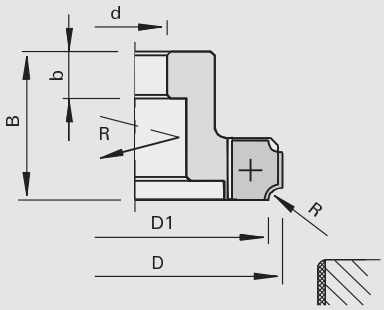

LEUCO DUR

tungsten carbide [HW]

MEC

Machine / Application

- edge banding machines EBM, Hebrock model: form part radius cutter FRF 130
- for rounding and flush-cutting of solid wood, veneer and plastic edge bands

Design

- one part version
- with shear angle
- n max = 18,000 min-1

Advantages

Notes

- sense of rotation according to DIN-EN 50144

R	Ø D	Ø D1	B	b	Ø d	Z	Ident-No. [L]	Ident-No. [R]
3	74	67	16	12	16	6	783001 s	783003 s
[mm]	[mm]	[mm]	[mm]	[mm]	[mm]			

Knives	R	B	H	S	Class-No.	Ident-No.
	2	16	13.5	2	151586	180151
	3	16	13.5	2	151586	180152
	[mm]	[mm]	[mm]	[mm]		

Spare parts	Dimension	Class-No.	Ident-No.
Clamping Bars	B=10	925300	168344
Set Screws	M8x12 DIN EN ISO 4028	995161	180001
Cranked Wrench Keys	SW3 DIN ISO 2936	985730	009672
Magnetic Stops	0,0	997800	016613
	[mm]		

222512

DIAMAX Edge Rounding Cutters DP - Homag, Brandt, Ott

Product

Drawing

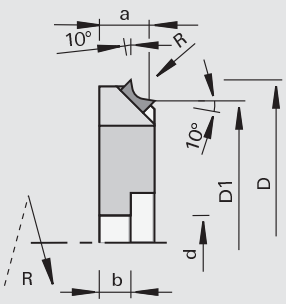

LEUCO topline

LEUCO DIAMAX

polycrystalline diamond [DP]

MEC

Machine / Application

- edge banding machines Homag, Brandt, Ott
- for rounding of solid wood, veneer and plastic edge bands

Design

- polished face
- high-finish clearance angle
- with shear angle
- n max = 24,000 min-1

Advantages

- optimum cutting quality

Notes

- constant basic dimensions a and D1
- sense of rotation according to DIN-EN 50144

R	Ø D	Ø D1	a	b	Ø d	Z	DKN	Ident-No. [L]	Ident-No. [R]
2,0	69	61	9.1	10.5	16	4	5x2,3	177312 s	177311 s
3,0	69	61	10	10.5	16	4	5x2,3	177314 s	177313 s
[mm]	[mm]	[mm]	[mm]	[mm]	[mm]		[mm]		

222512

DIAMAX Edge Rounding Cutters DP - HOLZ-HER

Product

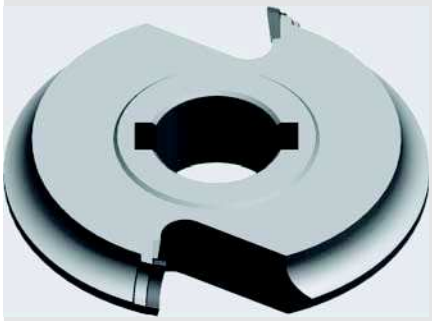

Drawing

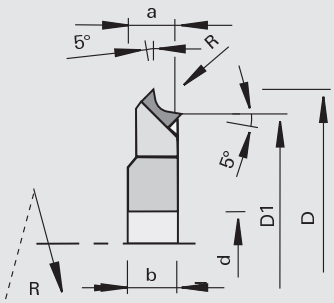

LEUCO DIAMAX

polycrystalline diamond [DP]

MEC

Machine / Application
- edge banding machines HOLZ-HER
- for rounding of solid wood, veneer and plastic edge bands

Design
- with shear angle
- n max = 24,000 min-1

Advantages

Notes
- constant basic dimensions a and D1
- sense of rotation according to DIN-EN 50144

R	Ø D	Ø D1	a	b	Ø d	Z	DKN	Ident-No. [L]	Ident-No. [R]
2,0	57	50	8.5	12.5	16	2	5x2,3	182141	182142
2,5	57	50	8.5	12.5	16	2	5x2,3	182143 o	182144 o
3,0	57	50	8.5	12.5	16	2	5x2,3	182145 o	182146 o
[mm]	[mm]	[mm]	[mm]	[mm]	[mm]		[mm]		

222512

DIAMAX Edge Chamfering Cutters DP - HOLZ-HER

Product

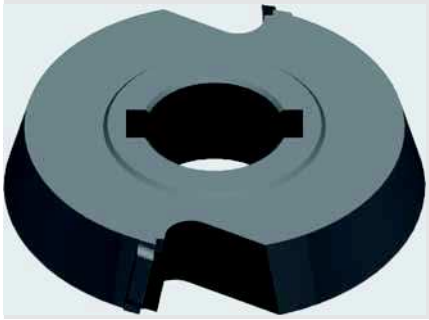

Drawing

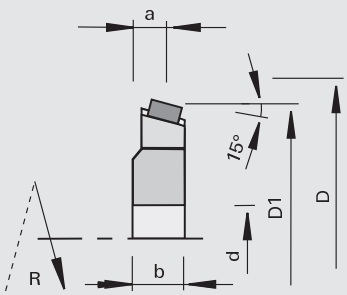

LEUCO DIAMAX

polycrystalline diamond [DP]

MEC

Machine / Application
- edge banding machines HOLZ-HER
- for chamfering of solid wood, veneer and plastic edge bands

Design
- with shear angle
- n max = 24,000 min-1

Advantages

Notes
- constant basic dimensions a and D1
- sense of rotation according to DIN-EN 50144

Chamfer∢	Ø D	Ø D1	a	b	Ø d	Z	DKN	Ident-No. [L]	Ident-No. [R]
15	52	50	8.5	12.5	16	2	5x2,3	182147 s	182148 s
[°]	[mm]	[mm]	[mm]	[mm]	[mm]		[mm]		

222512

DIAMAX Edge Rounding Cutters CM DP - HOLZ-HER 1832

Product

Drawing

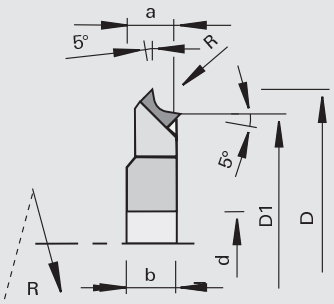

LEUCO topline

LEUCO DIAMAX

polycrystalline diamond [DP]

MEC

Machine / Application
- edge banding machines HOLZ-HER aggregate 1832
- for rounding of solid wood, veneer and plastic edge bands

Design
- with shear angle
- polished face and high-finish clearance angle
- n max = 24,000 min-1

Advantages
- optimized chip removal thanks to ChipMeister version
- less chips remain inside of the machine
- no malfunctions due to chips
- reduced suction performance
- low noise level

Notes
- constant basic dimensions a and D1
- sense of rotation according to DIN-EN 50144

R	Ø D	Ø D1	a	b	Ø d	Z	DKN	Ident-No.	
2	58.7	50	8.5	12	16	3	5x2,3	182684	
2,5	58.7	50	8.5	12	16	3	5x2,3	182685	s
3	58.7	50	8.5	12	16	3	5x2,3	182686	
[mm]	[mm]	[mm]	[mm]	[mm]	[mm]		[mm]		

222512

DIAMAX Edge Chamfering Cutters CM DP - HOLZ-HER 1832

Product

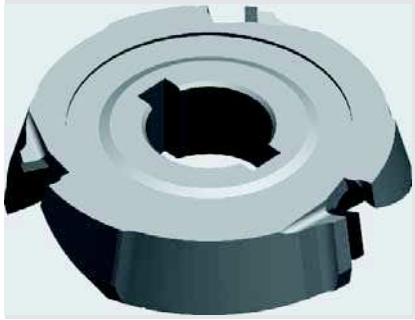

Drawing

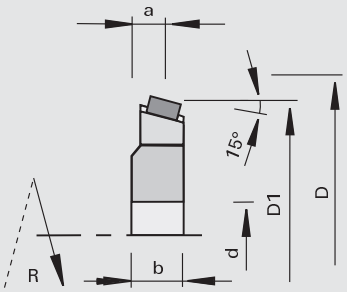

LEUCO topline

LEUCO DIAMAX

polycrystalline diamond [DP]

MEC

Machine / Application
- edge banding machines HOLZ-HER aggregate 1832
- for chamfering of solid wood, veneer and plastic edge bands

Design
- with shear angle
- polished face and high-finish clearance angle
- resharpenable area 3.5 mm
- n max = 24.000 min-1

Advantages
- optimized chip removal thanks to ChipMeister version
- less chips remain inside of the machine
- no malfunctions due to chips
- reduced suction performance
- low noise level

Notes
- constant basic dimensions a and D1
- sense of rotation according to DIN-EN 50144

Chamfer∢	Ø D	Ø D1	a	b	Ø d	Z	DKN	Ident-No.	
15	53	50	10	12	16	3	5x2,3	182687	s
45	56	50	10	12	16	3	5x2,3	182688	s
[°]	[mm]	[mm]	[mm]	[mm]	[mm]		[mm]		

222312

Edge Rounding Cutters CM DP - HOLZ-HER 1827

Product

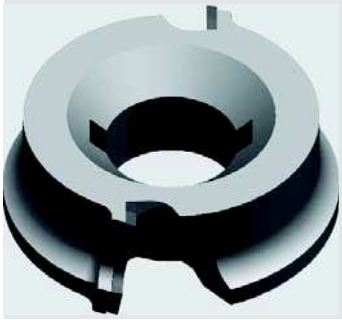

Drawing

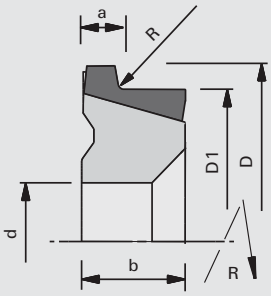

LEUCO topline

LEUCO DIA

polycrystalline diamond [DP]

MEC

Machine / Application

- edge banding machines HOLZ-HER aggregate 1827
- for rounding of solid wood, veneer and plastic edge bands

Design

- with shear angle
- polished face and high-finish clearance angle
- resharpenable area approx. 2 mm
- n max = 24.000 min-1

Advantages

- optimized chip removal thanks to ChipMeister version
- less chips remain inside of the machine
- no malfunctions due to chips
- reduced suction performance
- low noise level

Notes

- constant basic dimensions a and D1
- sense of rotation according to DIN-EN 50144

R	Ø D	Ø D1	a	b	Ø d	Z	DKN	Ident-No. [L]	Ident-No. [R]
1	56	50	8	17	20	2	5x2,2	183099 s	183100 s
2	56	50	8	17	20	2	5x2,2	183101	183102
2,5	56	50	8	17	20	2	5x2,2	183103	183104
3	57	50	8	17	20	2	5x2,2	183105 s	183106 s
5	60	50	8	17	20	2	5x2,2	183107 s	183108 s
[mm]	[mm]	[mm]	[mm]	[mm]	[mm]		[mm]		

222312

Edge Rounding Cutters CM DP - HOLZ-HER 1825M

Product

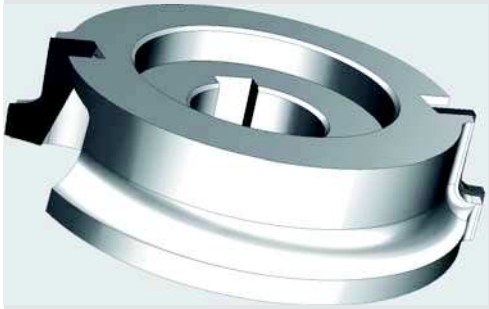

Drawing

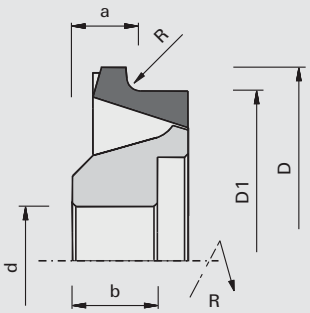

LEUCO topline

LEUCO DIA

polycrystalline diamond [DP]

MEC

Machine / Application

- edge banding machines HOLZ-HER aggregate 1825M
- for rounding of solid wood, veneer and plastic edge bands

Design

- for rounding of solid wood, veneer and plastic edge bands

Advantages

- optimized chip removal thanks to ChipMeister version
- less chips remain inside of the machine
- no malfunctions due to chips
- reduced suction performance
- low noise level

Notes

- constant basic dimensions a and D1
- sense of rotation according to DIN-EN 50144

R	Ø D	Ø D1	a	b	Ø d	Z	DKN	Ident-No. [L]	Ident-No. [R]
1	57	50	10	12.5	16	2	5x2,4	184319	184318
2	57	50	10	12.5	16	2	5x2,4	184321	184320
2,5	57	50	10	12.5	16	2	5x2,4	184323	184322
3	57	50	10	12.5	16	2	5x2,4	184325	184324
[mm]	[mm]	[mm]	[mm]	[mm]	[mm]		[mm]		

222312

Edge Rounding Cutters CM DP - HOLZ-HER 1833

Product

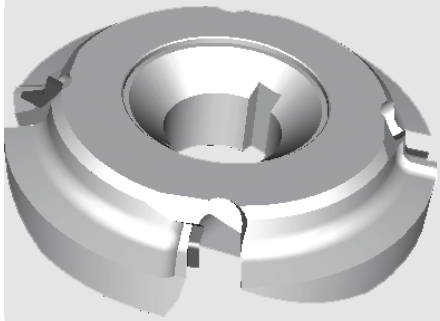

Drawing

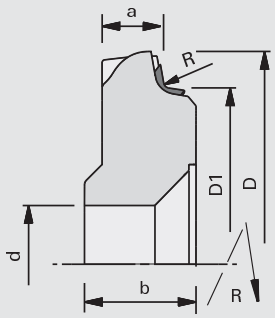

polycrystalline diamond [DP]

MEC

Machine / Application
- edge banding machines HOLZ-HER aggregate 1833
- for rounding of solid wood, veneer and plastic edge bands

Design
- with shear angle
- polished face and high-finish clearance angle
- resharpenable area 3.5 mm
- n max = 24.000 min-1

Advantages
- optimized chip removal thanks to ChipMeister version
- less chips remain inside of the machine
- no malfunctions due to chips
- reduced suction performance
- low noise level

Notes
- constant basic dimensions a and D1
- sense of rotation according to DIN-EN 50144

R	Ø D	Ø D1	a	b	Ø d	Z	DKN	Ident-No. [L]	Ident-No. [R]
1	72.5	61	13.5	19	20	4	5x2,2	182501 s	182500 s
2	72.5	61	13.5	19	20	4	5x2,2	182503	182502
2,5	72.5	61	13.5	19	20	4	5x2,2	182505	182504
3	72.5	61	13.5	19	20	4	5x2,2	182507	182506
[mm]	[mm]	[mm]	[mm]	[mm]	[mm]		[mm]		

222312

Edge Chamfering Cutters CM DP - HOLZ-HER 1833

Product

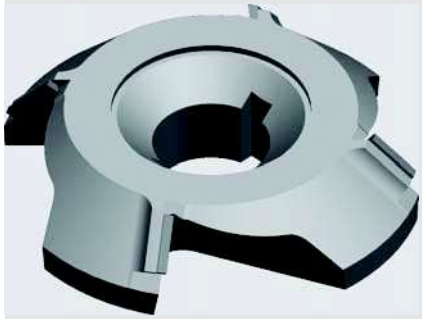

Drawing

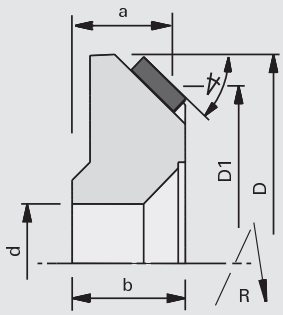

polycrystalline diamond [DP]

MEC

Machine / Application
- edge banding machines HOLZ-HER aggregate 1833
- for chamfering of solid wood, veneer and plastic edge bands

Design
- with shear angle
- polished face and high-finish clearance angle
- resharpenable area 3.5 mm
- n max = 24.000 min-1

Advantages
- optimized chip removal thanks to ChipMeister version
- less chips remain inside of the machine
- no malfunctions due to chips
- reduced suction performance
- low noise level

Notes
- constant basic dimensions a and D1
- sense of rotation according to DIN-EN 50144

Chamfer∢	Ø D	Ø D1	a	b	Ø d	Z	DKN	Ident-No. [L]	Ident-No. [R]
45	72.5	61	17	19	20	4	5x2,2	182509	182508
[°]	[mm]	[mm]	[mm]	[mm]	[mm]		[mm]		

222312

Edge Rounding Flush-Cutting Cutters CM DP - HOLZ-HER 1826

Product

Drawing

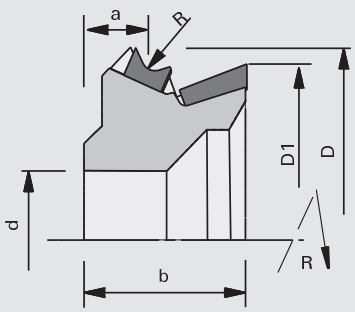

LEUCO topline

LEUCO DIA

polycrystalline diamond [DP]

MEC

Machine / Application
- edge banding machines HOLZ-HER aggregate 1826
- for rounding and flush-cutting of solid wood, veneer and plastic edge bands

Design
- with shear angle
- polished face and high-finish clearance angle
- resharpenable area 3.5 mm
- n max = 24.000 min-1

Advantages
- optimized chip removal thanks to ChipMeister version
- less chips remain inside of the machine
- no malfunctions due to chips
- reduced suction performance
- low noise level

Notes
- constant basic dimensions a and D1
- sense of rotation according to DIN-EN 50144

R	Ø D	Ø D1	a	b	Ø d	Z	DKN	Ident-No. [L]	Ident-No. [R]
1	57.3	50	10.76	23	20	2	5x2,2	182481 s	182480 s
5	57.3	50	11.80	23	20	2	5x2,2	182489 s	182488 s
1	57.3	50	10.76	23	20	3	5x2,2	182491 s	182490 s
5	57.3	50	11.80	23	20	3	5x2,2	182499 s	182498 s
[mm]	[mm]	[mm]	[mm]	[mm]	[mm]		[mm]		

222312

Edge Rounding Trimming Cutter CM DP - HOLZ-HER 1826 - AirStream-System

Product

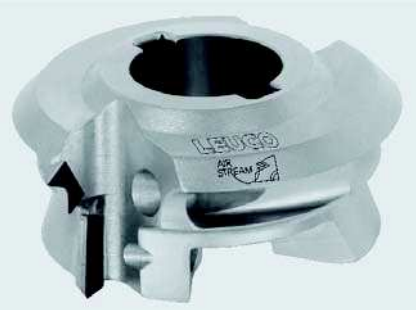

Drawing

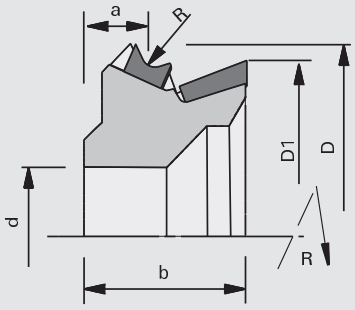

AIR STREAM

LEUCO DIA

polycrystalline diamond [DP]

MEC

Machine / Application
- edge banding machines HOLZ-HER aggregate 1826
- for rounding and flush-cutting of solid wood, veneer and plastic edge bands

Design
- with shear angle
- polished face and high-finish clearance angle
- Air-Stream-System
- ChipMeister
- n max = 24,000 min-1

Advantages
- improved chip removal thanks to ChipMeister version and AirStream-System
- less chips remain inside of the machine
- no malfunctions due to chips
- reduction of suction power
- low noise level

Notes
- constant basic dimensions a and D1
- sense of rotation according to DIN-EN 50144

R	Ø D	Ø D1	a	b	Ø d	Z	DKN		Ident-No. [L]	Ident-No. [R]
2	55	50	11.02	23.6	20	2+2	5x2,2	HOLZ-HER 1826	184735	184734
2,5	55.8	50	11.15	23.8	20	2+2	5x2,2	HOLZ-HER 1826	184737	184736
3	56	50	11.28	23.9	20	2+2	5x2,2	HOLZ-HER 1826	184739	184738
2	55	50	11.02	23.6	20	3+3	5x2,2	HOLZ-HER 1826	184741	184740
2,5	55.8	50	11.15	23.8	20	3+3	5x2,2	HOLZ-HER 1826	184743 s	184742 s
3	56	50	11.28	23.9	20	3+3	5x2,2	HOLZ-HER 1826	184745 s	184744 s
[mm]	[mm]	[mm]	[mm]	[mm]	[mm]		[mm]			

122110

Edge Rounding Cutters HW - SCM-Stefani Round/K

Product

Drawing

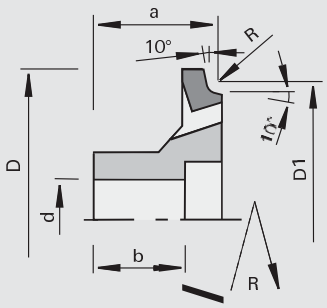

tungsten carbide [HW]

MEC

Machine / Application
- edge banding machines Stefani with ED system and aggregate Round/K
- for rounding of solid wood, veneer and plastic edge bands

Design
- with shear angle
- n max = 30,000 min-1

Advantages
- optimized chip removal
- less chips remain inside of the machine
- no malfunctions due to chips
- reduction of suction power
- noise reduced

Notes
- constant basic dimensions a and D1
- sense of rotation according to DIN-EN 50144

R	Ø D	Ø D1	a	b	Ø d	Z	DKN	Ident-No. [L]	Ident-No. [R]
1,0	55.7	49,9	25.4	20	16	3	5x2,3	182446 s	182447 s
1,5	55.7	50,9	25.4	20	16	3	5x2,3	182448 s	182449 s
2,0	55.7	51,9	25.4	20	16	3	5x2,3	182450	182451
3,0	55.7	53,9	25.4	20	16	3	5x2,3	182454	182455
[mm]	[mm]	[mm]	[mm]	[mm]	[mm]		[mm]		

122212

Edge Rounding Cutters HW - SCM-Stefani K130

Product

Drawing

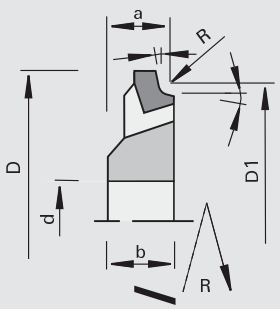

tungsten carbide [HW]

MEC

Machine / Application
- edge banding machines SCM-Stefani with aggregate K130
- for rounding of solid wood, veneer and plastic edge bands

Design
- with shear angle
- n max = 30,000 min-1

Advantages
- optimized chip removal
- less chips remain inside of the machine
- no malfunctions due to chips
- reduction of suction power
- noise reduced

Notes
- constant basic dimensions a and D1
- sense of rotation according to DIN-EN 50144

R	Ø D	Ø D1	a	b	Ø d	Z	DKN	Ident-No. [L]	Ident-No. [R]
2,0	55.3	52	12	13.5	16	3	5x2,3	192213	192214
3,0	55.3	54	13	13.5	16	3	5x2,3	192216	192215
[mm]	[mm]	[mm]	[mm]	[mm]	[mm]		[mm]		

122122

Edge Rounding Cutters HW - SCM-IDM

Product

Drawing

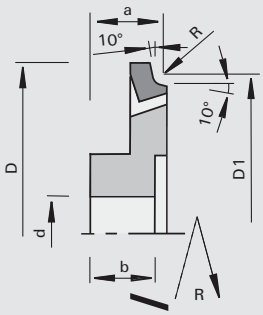

LEUCO topline

LEUCO DUR

tungsten carbide [HW]

MEC

Machine / Application

- edge banding machines SCM-IDM with ED system and aggregate C1 / C2
- for rounding of solid wood, veneer and plastic edge bands

Design

- with shear angle
- polished face and high-finish clearance angle
- n max = 18,000 min-1

Advantages

- optimized chip removal
- less chips remain inside of the machine
- no malfunctions due to chips
- reduction of suction power
- noise reduced

Notes

- constant basic dimensions a and D1
- sense of rotation according to DIN-EN 50144

R	Ø D	Ø D1	a	b	Ø d	Z	DKN	Ident-No. [L]	Ident-No. [R]
1,0	70	62,031	14.5	14	16	4	5x2,3	182911 s	182910 s
1,5	70	63,046	14.5	14	16	4	5x2,3	182909 s	182908 s
2,0	70	64,062	14.5	14	16	4	5x2,3	182907	182906
3,0	70	66,092	14.5	14	16	4	5x2,3	182903 s	182902 s
[mm]	[mm]	[mm]	[mm]	[mm]	[mm]		[mm]		

222512

DIAMAX Edge Rounding Cutters DP - SCM-Stefani

Product

Drawing

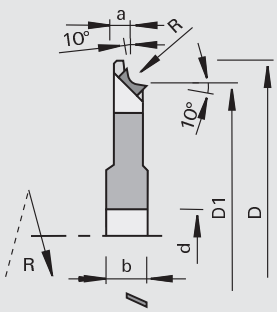

LEUCO topline

LEUCO DIAMAX

polycrystalline diamond [DP]

MEC

Machine / Application

- edge banding machines SCM Stefani with ED-System
- for rounding of solid wood, veneer and plastic edge bands

Design

- with shear angle
- n max = 20,000 min-1
- polished face and high-finish clearance angle

Advantages

- optimized chip removal
- less chips remain inside of the machine
- no malfunctions due to chips
- reduction of suction power
- noise reduced

Notes

- constant basic dimensions a and D1
- sense of rotation according to DIN-EN 50144

R	Ø D	Ø D1	a	b	Ø d	Z	DKN	Ident-No. [L]	Ident-No. [R]
1,0	73	61,7	8.1	12	12	4	4x2,15	182288 s	182289 s
2,0	73	61,7	7.1	12	12	4	4x2,15	182292 s	182293 s
[mm]	[mm]	[mm]	[mm]	[mm]	[mm]		[mm]		

222512

DIAMAX Edge Chamfering Cutters DP - SCM-Stefani

Product

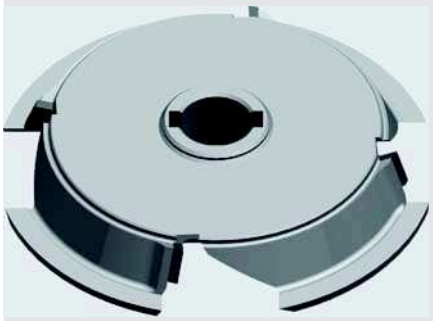

Drawing

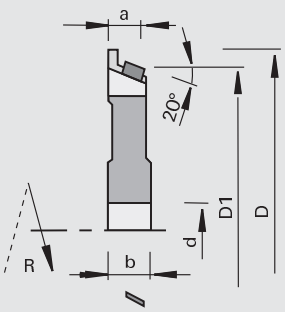

polycrystalline diamond [DP]

MEC

Machine / Application
- edge banding machines SCM-Stefani with ED-System
- for chamfering of solid wood, veneer and plastic edge bands

Design
- with shear angle
- n max = 20,000 min-1
- polished face and high-finish clearance angle

Advantages
- optimized chip removal
- less chips remain inside of the machine
- no malfunctions due to chips
- reduction of suction power
- noise reduced

Notes
- constant basic dimensions a and D1
- sense of rotation according to DIN-EN 50144

Chamfer∢	Ø D	Ø D1	a	b	Ø d	Z	DKN	Ident-No. [L]	Ident-No. [R]
20	73	61,7	8.7	12	12	4	4x2,15	182302 s	182303 s
[°]	[mm]	[mm]	[mm]	[mm]	[mm]		[mm]		

222310

Edge Rounding Cutters DP - SCM-IDM Round/K

Product

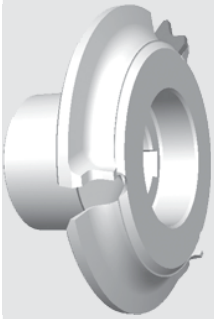

Drawing

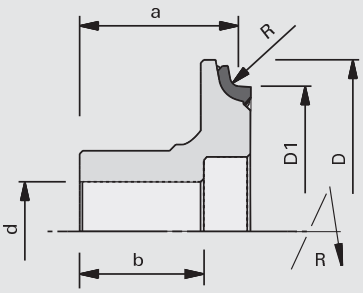

polycrystalline diamond [DP]

MEC

Machine / Application
- edge banding machines SCM-IDM with ED system and aggregate Round/K
- for rounding of solid wood, veneer and plastic edge bands

Design
- with shear angle
- n max = 20,000 min-1
- polished face and high-finish clearance angle

Advantages
- optimized chip removal
- less chips remain inside of the machine
- no malfunctions due to chips
- reduced suction performance
- low noise level

Notes
- constant basic dimensions a and D1
- sense of rotation according to DIN-EN 50144

R	Ø D	Ø D1	a	b	Ø d	Z	DKN	Ident-No. [L]	Ident-No. [R]
1	55.3	49,93	25.4	20	16	3	5x2,3	182416 s	182415 s
1,5	55.3	50,93	25.4	20	16	3	5x2,3	182418 s	182417 s
2	55.3	51,93	25.4	20	16	3	5x2,3	182414 s	182413 s
2,5	55.7	52,93	25.4	20	16	3	5x2,3	182424 s	182423 s
3	55.7	53,93	25.4	20	16	3	5x2,3	182412 s	182411 s
[mm]	[mm]	[mm]	[mm]	[mm]	[mm]		[mm]		

222310

Edge Rounding Cutters DP - SCM-IDM C1/C2

Product

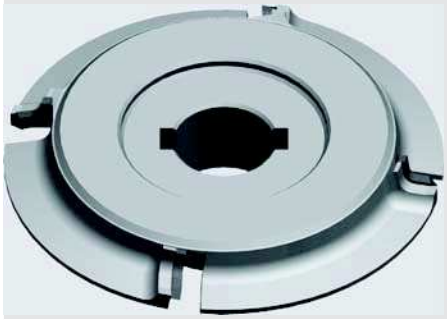

Drawing

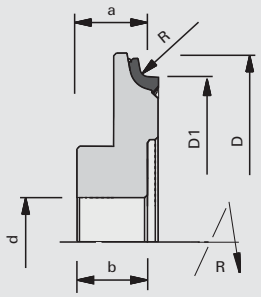

polycrystalline diamond [DP]

MEC

Machine / Application
- edge banding machines SCM-IDM with ED system and aggregate C1 / C2
- for rounding of solid wood, veneer and plastic edge bands

Design
- with shear angle
- n max = 18,000 min-1
- polished face and high-finish clearance angle

Advantages
- optimized chip removal
- less chips remain inside of the machine
- no malfunctions due to chips
- reduced suction performance
- low noise level

Notes
- constant basic dimensions a and D1
- sense of rotation according to DIN-EN 50144

R	Ø D	Ø D1	a	b	Ø d	Z	DKN	Ident-No. [L]	Ident-No. [R]
1,0	70	60	14.5	14	16	4	5x2,2	182901 s	182900 s
1,5	70	60	14.5	14	16	4	5x2,2	182899 s	182898 s
2,0	70	60	14.5	14	16	4	5x2,2	182897 s	182896 s
2,5	70	60	14.5	14	16	4	5x2,2	182895 s	182894 s
3,0	70	60	14.5	14	16	4	5x2,2	182893 s	182892 s
[mm]	[mm]	[mm]	[mm]	[mm]	[mm]		[mm]		

222210

DIAMAX Edge Rounding Cutters DP - Biesse Ergho, Akron

Product

Drawing

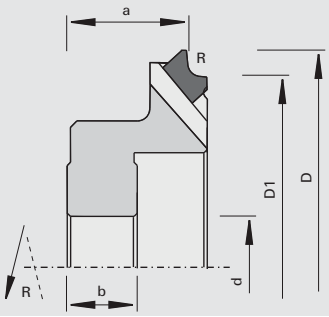

polycrystalline diamond [DP]

MEC

Machine / Application
- edge banding machine Biesse Ergho/Akron 200/800 - CR 200/CR 202
- for rounding of solid wood, veneer and plastic edge bands

Design
- with shear angle
- reduced resharpening area
- n max = 24,000 min-1

Advantages

Notes
- constant basic dimensions a and D1
- sense of rotation according to DIN-EN 50144

R	Ø D	Ø D1	a	b	Ø d	Z	DKN	Ident-No. [L]	Ident-No. [R]
1,5	68	59,86	21	22.3	16	6	5x2,3	183699 s	183700 s
2	68	59,86	21	22.3	16	6	5x2,3	183701 s	183702 s
3	68	59,86	21	22.3	16	6	5x2,3	183703 s	183704 s
[mm]	[mm]	[mm]	[mm]	[mm]	[mm]		[mm]		

222510

DIAMAX Edge Rounding Cutters DP - Biesse

Product

Drawing

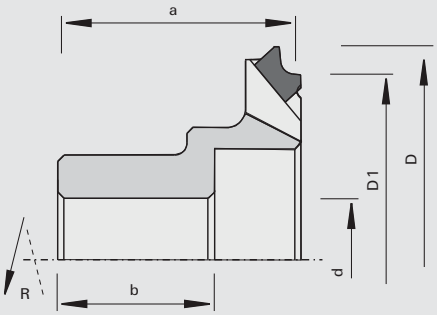

LEUCO topline

LEUCO DIAMAX

polycrystalline diamond [DP]

MEC

Machine / Application
- edge banding machines Biesse
- for rounding of solid wood, veneer and plastic edge bands

Design
- with shear angle
- polished face and high-finish clearance angle
- reduced resharpening area
- n max = 24,000 min-1

Advantages
- optimum cutting quality

Notes
- constant basic dimensions a and D1
- sense of rotation according to DIN-EN 50144

R	Ø D	Ø D1	a	b	Ø d	Z	DKN	Ident-No. [L]	Ident-No. [R]
1,5	67	60	38.5	39.5	20	6	6x2,8	183709 s	183710 s
2	67	60	38.5	39.5	20	6	6x2,8	183711 s	183712 s
3	67	60	38.5	39.5	20	6	6x2,8	183713 s	183714 s
[mm]	[mm]	[mm]	[mm]	[mm]	[mm]		[mm]		

222510

DIAMAX Edge Chamfering Cutters DP - Biesse

Product

Drawing

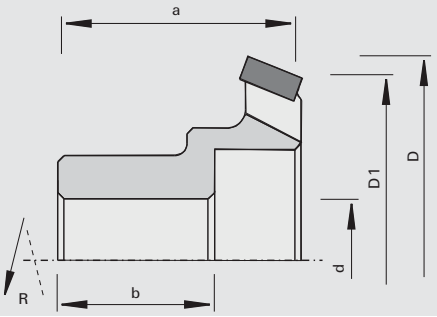

LEUCO topline

LEUCO DIAMAX

polycrystalline diamond [DP]

MEC

Machine / Application
- edge banding machines Biesse
- for chamfering of solid wood, veneer and plastic edge bands

Design
- with shear angle
- polished face and high-finish clearance angle
- reduced resharpening area
- n max = 24,000 min-1

Advantages
- optimum cutting quality

Notes
- constant basic dimensions a and D1
- sense of rotation according to DIN-EN 50144

Chamfer∢	Ø D	Ø D1	a	b	Ø d	Z	DKN	Ident-No. [L]	Ident-No. [R]
25	67	60	38.5	39.5	20	6	6x2,8	183715 s	183716 s
[°]	[mm]	[mm]	[mm]	[mm]	[mm]		[mm]		

222360

Edge Rounding / Chamfering Cutters DP Multi - Biesse

Product

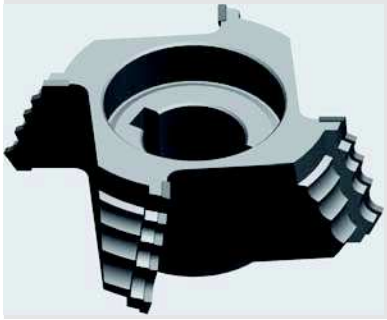

Drawing

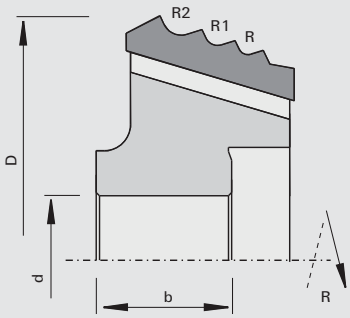

LEUCO topline

LEUCO DIA

polycrystalline diamond [DP]

MEC

Machine / Application
- edge banding machines Biesse RF 40
- for rounding and chamfering of solid wood, veneer and plastic edge bands

Design
- with shear angle
- polished face and high-finish clearance angle
- resharpening area 1,0 mm
- n max = 24,000 min-1

Advantages
- optimum cutting quality

Notes
- sense of rotation according to DIN-EN 50144

R	R1	R2	Chamfer∢	Ø D	b	Ø d	Z	DKN	Ident-No. [L]	Ident-No. [R]
1,5	2.0	3.0	25	75.4	30	20	4	6x2,8	183707 s	183708 s
[mm]	[mm]	[mm]	[°]	[mm]	[mm]	[mm]		[mm]		

120120

Edge Chamfering Cutterheads HW HSK 25R - Homag, IMA

Product

Drawing

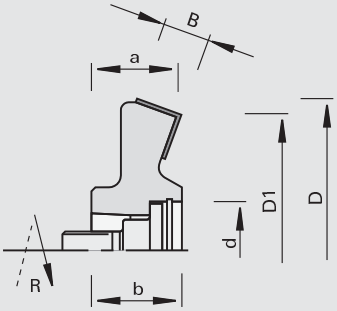

LEUCO DUR

tungsten carbide [HW]

MEC

Machine / Application
- edge banding machines Homag, IMA
- for flush-cutting and chamfering of solid wood, veneer and plastic edge bands

Design
- with shear angle
- cutting material: HW HL Board 05
- n max = 18,000 min-1

Advantages
- excellent cutting quality thanks to high radial running accuracy and precise tool balancing

Notes
- constant basic dimensions a and D1
- sense of rotation according to DIN-EN 50144

Chamfer∢	Ø D	Ø D1	a	B	b	Ø d	Z	Ident-No. [L]	Ident-No. [R]
20	77	70	21.5	12	23	HSK 25R	4	177594	177593
[°]	[mm]	[mm]	[mm]	[mm]	[mm]	[mm]			

Turnover Knives	B	H	S	Class-No.	Ident-No.
	12	12	1.5	150515	003080
	[mm]	[mm]	[mm]		

Spare parts	Dimension	Class-No.	Ident-No.
Screws	M10x1,25x32 SW8	995190	177780
Shim Rings	18x25x1,0 DIN 988	995440	177781
Locking Rings	25x1,2 DIN 472	995460	177782
Clamping Bars	B=10	925300	164526
Set Screws	M6x12 DIN EN ISO 4028	995161	180214
Screwdrivers	SW3x100	985730	166090
	[mm]		

120102

Edge Rounding Cutterheads HW HSK 25R - Homag

Product

Drawing

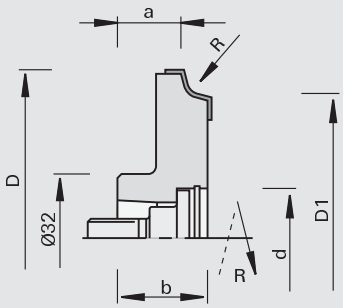

tungsten carbide [HW]

MEC

Machine / Application

- edge banding machines Homag
- for rounding of solid wood, veneer and plastic edge bands

Design

- cutting edges parallel to cutter axis
- cutting material: HW HL Board 05

Advantages

- excellent cutting quality thanks to high radial running accuracy and precise tool balancing

Notes

- constant basic dimensions a and D1
- same cutterhead body for R 1.5 - 3 mm
- sense of rotation according to DIN-EN 50144

R	Ø D	Ø D1	a	b	Ø d	Z	nmax	Ident-No. [L]	Ident-No. [R]
1,5	79	70	16.5	23	HSK 25R	4	18000	177734 &	177733 &
2,0	79	70	16.5	23	HSK 25R	4	18000	177736 &	177735 &
2,5	79	70	16.5	23	HSK 25R	4	18000	177738 &	177737 &
3,0	79	70	16.5	23	HSK 25R	4	18000	177740 &	177739 &
[mm]	[mm]	[mm]	[mm]	[mm]	[mm]		[min-1]		

Knives	R	B	H	S	Class-No.	Ident-No. [L]	Ident-No. [R]
	1,5	12	17	2	151521	177606	177605
	2	12	17	2	151521	177608	177607
	2,5	12	17	2	151521	177610 s	177609 s
	3	12	17	2	151521	177612	177611
	[mm]	[mm]	[mm]	[mm]			

Spare parts	Dimension	Class-No.	Ident-No.
Clamping Bars	12x11x7	925300	177724
Screws	M10x1,25x32 SW8	995190	177780
Shim Rings	18x25x1,0 DIN 988	995440	177781
Locking Rings	25x1,2 DIN 472	995460	177782
Set Screws	M6x16 SW3	995161	001617
Cranked Wrench Keys	SW3 DIN ISO 2936	985730	009672
	[mm]		

120112

Edge Rounding Cutterheads HW HSK 25R - IMA

Product

Drawing

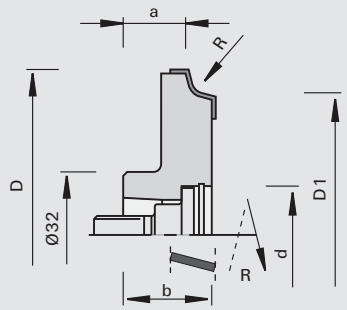

tungsten carbide [HW]

MEC

Machine / Application

- edge banding machines IMA
- for rounding of solid wood, veneer and plastic edge bands

Design

- with shear angle
- cutting material: HW HL Board 06

Advantages

- excellent cutting quality thanks to high radial running accuracy and precise tool balancing

Notes

- constant basic dimensions a and D1
- sense of rotation according to DIN-EN 50144

R	Ø D	Ø D1	a	b	Ø d	Z	nmax	Ident-No. [L]	Ident-No. [R]
2	80	70	16.5	23	HSK 25R	4	18000	180170 &	180169 &
3	80	70	16.5	23	HSK 25R	4	18000	180172 &	180171 &
[mm]	[mm]	[mm]	[mm]	[mm]	[mm]		[min-1]		

Knives	R	B	H	S	Class-No.	Ident-No. [L]	Ident-No. [R]
	2	12	18	2	151586	180174	180173
	3	12	18	2	151586	180176	180175
	[mm]	[mm]	[mm]	[mm]			

Spare parts	Dimension		Class-No.	Ident-No.
Clamping Bars	12x11x7	left	925300	180255
Clamping Bars	12x11x7	right	925300	180256
Screws	M10x1,25x32 SW8		995190	177780
Shim Rings	18x25x1,0 DIN 988		995440	177781
Locking Rings	25x1,2 DIN 472		995460	177782
Set Screws	M6x16 SW3		995161	001617
Cranked Wrench Keys	SW3 DIN ISO 2936		985730	009672
	[mm]			

222510

Edge Chamfering Cutters DP HSK 25R - Homag, IMA

Product

Drawing

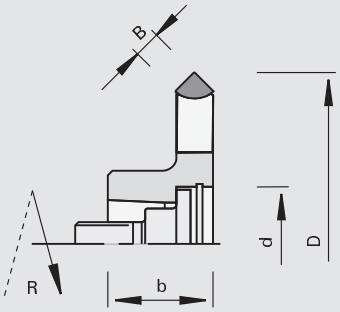

LEUCO topline

LEUCO DIA

polycrystalline diamond [DP]

MEC

Machine / Application
- edge banding machines Homag, IMA
- for chamfering of solid wood, veneer and plastic edge bands

Design
- polished face
- high-finish clearance angle
- resharpenable
- n max = 24,000 min-1

Advantages
- optimum cutting quality thanks to high concenctric accuracy and precise tool balancing

Notes
- sense of rotation according to DIN-EN 50144

Chamfer∢	Ø D	B	b	Ø d	Z	Ident-No. [L]	Ident-No. [R]
45	75	8	23	HSK 25R	4	177705 s	177706 s
[°]	[mm]	[mm]	[mm]	[mm]			

Spare parts	Dimension	Class-No.	Ident-No.
Screws	M10x1,25x32 SW8	995190	177780
Shim Rings	18x25x1,0 DIN 988	995440	177781
Locking Rings	25x1,2 DIN 472	995460	177782
	[mm]		

222510

DIAMAX Edge Chamfering Cutters DP HSK 25R - Homag, IMA

Product

Drawing

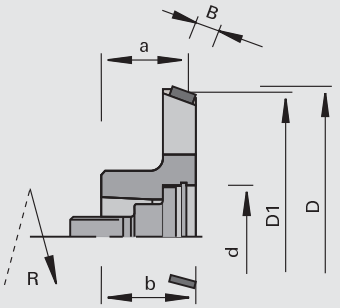

LEUCO topline

LEUCO DIAMAX

polycrystalline diamond [DP]

MEC

Machine / Application
- edge banding machines Homag aggregate FF, IMA,
- for flush-cutting and chamfering of solid wood, veneer and plastic edge bands

Design
- polished face
- high-finish clearance angle
- with shear angle
- n max = 24,000 min-1

Advantages
- optimum cutting quality thanks to high concenctric accuracy and precise tool balancing

Notes
- constant basic dimensions a and D1
- sense of rotation according to DIN-EN 50144

Chamfer∢	Ø D1	Ø D	a	B	b	Ø d	Z	Ident-No. [L]	Ident-No. [R]
20	70	73	21.5	6	23	HSK 25R	4	177649 s	177650 s
[°]	[mm]	[mm]	[mm]	[mm]	[mm]	[mm]			

Spare parts	Dimension	Class-No.	Ident-No.
Screws	M10x1,25x32 SW8	995190	177780
Shim Rings	18x25x1,0 DIN 988	995440	177781
Locking Rings	25x1,2 DIN 472	995460	177782
	[mm]		

222512

DIAMAX Edge Rounding Cutters DP HSK 25R - Homag FF, IMA

Product

Drawing

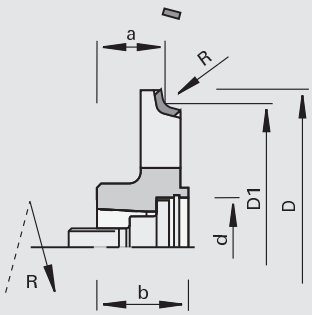

LEUCO topline

LEUCO DIAMAX

polycrystalline diamond [DP]

MEC

Machine / Application

- edge banding machines Homag aggregate FF, IMA,
- for rounding of solid wood, veneer and plastic edge bands

Design

- polished face
- high-finish clearance angle
- with shear angle
- n max = 24,000 min-1

Advantages

- optimum cutting quality thanks to high concenctric accuracy and precise tool balancing

Notes

- constant basic dimensions a and D1
- Z = 4 for feed rate 20 - 30 m/min
- Z = 6 for feed rate 30 - 45 m/min
- sense of rotation according to DIN-EN 50144

R	Ø D	Ø D1	a	b	Ø d	Z	Ident-No. [L]	Ident-No. [R]
1,0	75.1	70	16.5	23	HSK 25R	4	177655 s	177656 s
1,5	76.1	70	16.5	23	HSK 25R	4	177657 s	177658 s
2,0	77.5	70	16.5	23	HSK 25R	4	177659	177660
2,5	78.1	70	16.5	23	HSK 25R	4	177661 s	177662 s
3,0	78.8	70	16.5	23	HSK 25R	4	177663 s	177664 s
[mm]	[mm]	[mm]	[mm]	[mm]	[mm]			

R	Ø D	Ø D1	a	b	Ø d	Z	Ident-No. [L]	Ident-No. [R]
1,0	75.1	70	16.5	23	HSK 25R	6	178545 s	178546 s
1,5	76.1	70	16.5	23	HSK 25R	6	178547 s	178548 s
2,0	77.5	70	16.5	23	HSK 25R	6	178549 s	178550 s
2,5	78.1	70	16.5	23	HSK 25R	6	178551 s	178552 s
3,0	78.8	70	16.5	23	HSK 25R	6	178553 s	178554 s
4,0	81.2	70	16.5	23	HSK 25R	6	178557 s	178558 s
[mm]	[mm]	[mm]	[mm]	[mm]	[mm]			

Spare parts	Dimension	Class-No.	Ident-No.
Screws	M10x1,25x32 SW8	995190	177780
Shim Rings	18x25x1,0 DIN 988	995440	177781
Locking Rings	25x1,2 DIN 472	995460	177782
	[mm]		

222512

DIAMAX Edge Chamfering Cutters DP HSK 32 - Homag

Product

Drawing

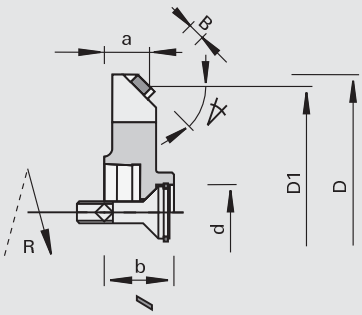

polycrystalline diamond [DP]

MEC

Machine / Application
- edge banding machines Homag / aggregate FK 01, FK 02, FK 03
- for chamfering of solid wood, veneer and plastic edge bands

Design
- polished face
- high-finish clearance angle
- with shear angle
- n max = 18,000 min-1

Advantages
- optimum cutting quality thanks to high concenctric accuracy and precise tool balancing

Notes
- constant basic dimensions a and D1
- sense of rotation according to DIN-EN 50144

Chamfer∢	Ø D	Ø D1	a	B	b	Ø d	Z	Ident-No. [L]	Ident-No. [R]
5	62.7	62	11.5	6	17.5	HSK 32	4	177405 s	177404 s
30	65.9	62	11.5	6	17.5	HSK 32	4	177407 s	177406 s
45	71.5	62	11.5	6	17.5	HSK 32	4	177409 s	177408 s
20	64.9	62	11.5	6	17.5	HSK 32	4	176494	176493
[°]	[mm]	[mm]	[mm]	[mm]	[mm]	[mm]			

Spare parts	Dimension	Class-No.	Ident-No.
Locking Rings	14x1 DIN 472	995460	057258
Shim Rings	8x14x1 DIN 988	995440	173406
Countersunk Flat Headed Screws	M6x30 DIN 7991	995121	173407
	[mm]		

222512

DIAMAX Edge Rounding Cutters DP HSK 32 - Homag FK

Product

Drawing

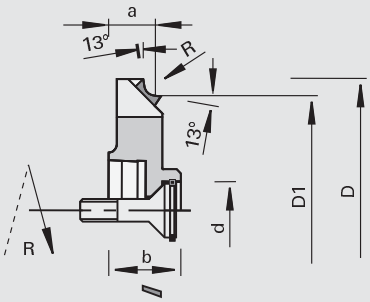

polycrystalline diamond [DP]

MEC

Machine / Application
- edge banding machines Homag / aggregate FK 01, FK 02, FK 03
- for rounding of solid wood, veneer and plastic edge bands

Design
- polished face
- high-finish clearance angle
- with shear angle
- n max = 18,000 min-1
- HSK 32 shortened

Advantages
- optimum cutting quality thanks to high concenctric accuracy and precise tool balancing

Notes
- constant basic dimensions a and D1
- Z = 4 for feed rate 20 - 30 m/min
- Z = 6 for feed rate 30 - 45 m/min
- sense of rotation according to DIN-EN 50144

R	Ø D	Ø D1	a	b	Ø d	Z	Ident-No. [L]	Ident-No. [R]
0,8	68.1	62	11.5	17.5	HSK 32	4	179376 s	179377 s
1,0	68.1	62	11.5	17.5	HSK 32	4	179378 s	179379 s
1,5	68.1	62	11.5	17.5	HSK 32	4	179380 s	179381 s
[mm]	[mm]	[mm]	[mm]	[mm]	[mm]			

R	Ø D	Ø D1	a	b	Ø d	Z	Ident-No. [L]	Ident-No. [R]
2,0	71.2	62	11.5	17.5	HSK 32	4	179382	179383
2,5	71.2	62	11.5	17.5	HSK 32	4	179384 s	179385 s
3,0	71.2	62	11.5	17.5	HSK 32	4	179386 s	179387 s
[mm]	[mm]	[mm]	[mm]	[mm]	[mm]			

R	Ø D	Ø D1	a	b	Ø d	Z	Ident-No. [L]	Ident-No. [R]
1,0	68.1	62	11.5	17.5	HSK 32	6	178466 s	178467 s
1,5	68.1	62	11.5	17.5	HSK 32	6	178468 s	178469 s
2,0	71.2	62	11.5	17.5	HSK 32	6	178470 s	178471 s
3,0	71.2	62	11.5	17.5	HSK 32	6	178474 s	178475 s
[mm]	[mm]	[mm]	[mm]	[mm]	[mm]			

Spare parts	Dimension	Class-No.	Ident-No.
Locking Rings	14x1 DIN 472	995460	057258
Shim Rings	8x14x1 DIN 988	995440	173406
Countersunk Flat Headed Screws	M6x30 DIN 7991	995121	173407
	[mm]		

222812

Edge Rounding Cutters DP HSK 32 - Homag FK

Product

Drawing

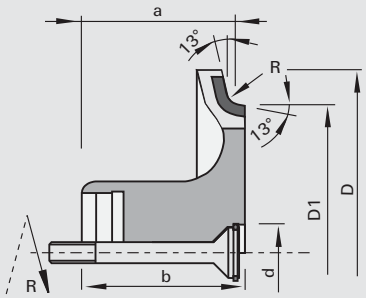

LEUCO topline

LEUCO i-system

polycrystalline diamond [DP]

MEC

Machine / Application

- edge banding machines Homag aggregate FK
- for rounding of solid wood, veneer and plastic edge bands

Design

- polished face
- high-finish clearance angle
- with shear angle

Advantages

- optimum cutting quality thanks to high concentric accuracy and precise tool balancing
- optimized chip removal thanks to internal chip evacuation
- less chips remain inside of the machine
- no malfunctions due to chips
- reduction of suction power
- noise reduced

Notes

- constant basic dimensions a and D1
- machines must be equipped with i-system
- sense of rotation according to DIN-EN 50144

R	Ø D	Ø D1	a	b	Ø d	Z	Ident-No. [L]	Ident-No. [R]
1,0	74	62	31.5	33	HSK 32	4	180301	180300
1,5	74	62	31.5	33	HSK 32	4	180278	180279
2,0	74	62	31.5	33	HSK 32	4	180280	180281
2,5	74	62	31.5	33	HSK 32	4	180303 s	180302 s
3,0	74	62	31.5	33	HSK 32	4	180282	180283
4,0	74	62	31.5	33	HSK 32	4	180307 s	180306 s
5,0	74	62	31.5	33	HSK 32	4	180311 s	180310 s
1,0	74	62	31.5	33	HSK 32	6	180313 s	180312 s
[mm]	[mm]	[mm]	[mm]	[mm]	[mm]			

R	Ø D	Ø D1	a	b	Ø d	Z	Ident-No. [L]	Ident-No. [R]
1,5	74	62	31.5	33	HSK 32	6	180315	180314
2,0	74	62	31.5	33	HSK 32	6	180284	180285
3,0	74	62	31.5	33	HSK 32	6	180286 s	180287 s
2,5	74	62	31.5	33	HSK 32	6	180317 s	180316 s
4,0	74	62	31.5	33	HSK 32	6	180304 s	180305 s
5,0	74	62	31.5	33	HSK 32	6	180308 s	180309 s
[mm]	[mm]	[mm]	[mm]	[mm]	[mm]			

Spare parts	Dimension	Class-No.	Ident-No.
Locking Rings	14x1 DIN 472	995460	057258
Shim Rings	8x14x1 DIN 988	995440	173406
Countersunk Flat Headed Screws	M6x30 DIN 7991	995121	173407
	[mm]		

222812

Edge Chamfering Cutters DP HSK 32 - Homag

Product

Drawing

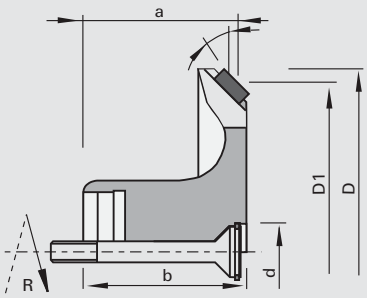

LEUCO topline

LEUCO iQ system

polycrystalline diamond [DP]

MEC

Machine / Application

- edge banding machines Homag / FK-aggregates
- for chamfering of solid wood, veneer and plastic edge bands

Design

- polished face
- high-finish clearance angle
- with shear angle

Advantages

- optimum cutting quality thanks to high concenctric accuracy and precise tool balancing
- optimized chip removal thanks to internal chip evacuation
- less chips remain inside of the machine
- no malfunctions due to chips
- reduction of suction power
- noise reduced

Notes

- constant basic dimensions a and D1
- attention: machines must be re-equipped accordingly
- sense of rotation according to DIN-EN 50144

Chamfer∢	Ø D	Ø D1	a	b	Ø d	Z	Ident-No. [L]	Ident-No. [R]
20	65.1	62,3	31.5	34	HSK 32	4	180288	180289
45	70	62,3	31.5	34	HSK 32	4	180319	180318
20	65.1	62,3	31.5	34	HSK 32	6	180290	180291
45	70	62,3	31.5	34	HSK 32	6	180321 s	180320 s
[°]	[mm]	[mm]	[mm]	[mm]	[mm]			

Spare parts	Dimension	Class-No.	Ident-No.
Locking Rings	14x1 DIN 472	995460	057258
Shim Rings	8x14x1 DIN 988	995440	173406
Countersunk Flat Headed Screws	M6x30 DIN 7991	995121	173407
	[mm]		

222512

DIAMAX Edge Rounding-Chamfering Cutters DP HSK 25R - Homag

Product

Drawing

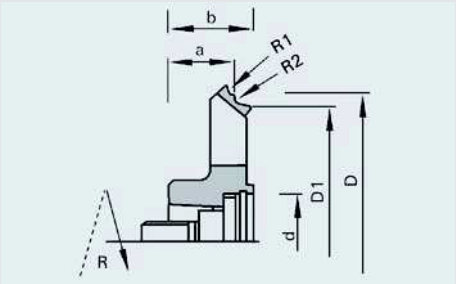

polycrystalline diamond [DP]

MEC

Machine / Application

- edge banding machines Homag aggregate FF
- for rounding and chamfering of solid wood, veneer and plastic edge bands

Design

- polished face
- high-finish clearance angle
- with shear angle
- n max = 24,000 min-1

Advantages

- optimum cutting quality thanks to high concenctric accuracy and precise tool balancing

Notes

- constant basic dimensions a and D1
- sense of rotation according to DIN-EN 50144

R1	R2	Chamfer∢	Ø D	Ø D1	a	b	Ø d	Z	Ident-No. [L]	Ident-No. [R]
3	2	20	85	69	22.75	28	HSK 25R	4	179076 s	179077 s
[mm]	[mm]	[°]	[mm]	[mm]	[mm]	[mm]	[mm]			

Spare parts	Dimension	Class-No.	Ident-No.
Screws	M10x1,25x32 SW8	995190	177780
Shim Rings	18x25x1,0 DIN 988	995440	177781
Locking Rings	25x1,2 DIN 472	995460	177782
	[mm]		

223512

DIAMAX Edge Rounding-Chamfering Cutters DP HSK 25R - flexTrim - Homag

Product

Drawing

polycrystalline diamond [DP]

MEC

Machine / Application

- Homag edge banding machines for shaping units FK11, FK20, FK21 , FF32, FF12, PF21 with flex Trim aggegate
- for rounding and / or chamfering of solid wood, veneer and plastic edge bands

Design

- 2 piece tool
- polished face
- precise clearance angle
- with shear angle
- n max = 18,000 min-1

Advantages

- optimized chip removal thanks to ChipMeister version
- short distance between panels at high feed rates
- excellent cutting quality thanks to high radial running accuracy and precise tool balancing
- combination of 2 different profiles

Notes

- further combinations on request
- constant basic dimensions a and D1
- sense of rotation according to DIN-EN 50144

R1	R2	Chamfer∢	Ø D	Ø D1	a	b	Ø d	Z	Ident-No. [L]	Ident-No. [R]
1.5	1.0		78	70	19.5		HSK 25R	4	185077	185076
2.0	1.0		78	70	19.5		HSK 25R	4	185189	185188
2.0	1.5		78	70	19.5		HSK 25R	4	183121	183122
3.0	2.0		78	70	19.5		HSK 25R	4	183115	183116
2.0		20	78	70	19.5		HSK 25R	4	185191 s	185190 s
2.0		45	78	70	19.5		HSK 25R	4	185193 s	185192 s
[mm]	[mm]	[°]	[mm]	[mm]	[mm]	[mm]	[mm]			

Spare parts	Dimension	Class-No.	Ident-No.
Screws	M10x1,25x32 SW8	995190	177780
Shim Rings	18x25x1,0 DIN 988	995440	177781
Locking Rings	25x1,2 DIN 472	995460	177782
Head Cap Screws	M5x12 DIN EN ISO 4762	995111	185320
O-Rings	41x1,78 NBR 11-70	997800	69004135
	[mm]		

222812

Edge Rounding-Chamfering Cutters DP Multi HSK 25R - Homag FF

Product

Drawing

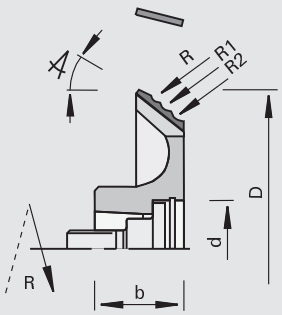

LEUCO topline

LEUCO i-system

polycrystalline diamond [DP]

MEC

Machine / Application

- edge banding machines Homag aggregate FF
- for rounding and chamfering of solid wood, veneer and plastic edge bands

Design

- polished face
- high-finish clearance angle
- with shear angle
- resharpenable area 1.0 mm

Advantages

- optimum cutting quality thanks to high concenctric accuracy and precise tool balancing
- optimized chip removal thanks to internal chip evacuation
- less chips remain inside of the machine
- no malfunctions due to chips
- reduction of suction power
- noise reduced

Notes

- constant basic dimensions
- Z = 4 for feed rate 20 - 30 m/min
- Z = 6 for feed rate 30 - 45 m/min
- machines must be equipped with i-system
- sense of rotation according to DIN-EN 50144

R	R1	R2	Chamfer∢	Ø D	b	Ø d	Z	Ident-No. [L]	Ident-No. [R]
3,0	2.0		20	81.1	28	HSK 25R	4	180757	180758
3,0	2.0		20	81.1	28	HSK 25R	6	180759 s	180760 s
1,5	2.0		20	81.6	28	HSK 25R	4	185075	185074
1,5	2.0	3.0	20	81.1	28	HSK 25R	4	180708 s	180709 s
1,5	2.0	3.0	20	81.1	28	HSK 25R	6	180763 s	180764 s
[mm]	[mm]	[mm]	[°]	[mm]	[mm]	[mm]			

Spare parts	Dimension	Class-No.	Ident-No.
Screws	M10x1,25x32 SW8	995190	177780
Shim Rings	18x25x1,0 DIN 988	995440	177781
Locking Rings	25x1,2 DIN 472	995460	177782
	[mm]		

222812

Edge Rounding Cutters DP HSK 25R - Homag FF, IMA

Product

Drawing

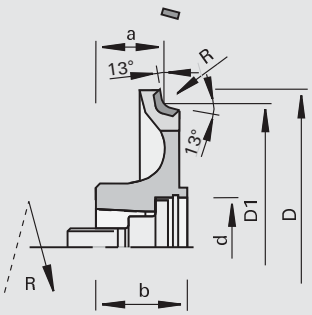

LEUCO topline

LEUCO i-system

polycrystalline diamond [DP]

MEC

Machine / Application

- edge banding machines Homag aggregate FF
- for chamfering of solid wood, veneer and plastic edge bands

Design

- polished face
- precise clearance angle
- with shear angle
- runout angle 13°

Advantages

- optimum cutting quality thanks to high concenctric accuracy and precise tool balancing
- optimized chip removal thanks to internal chip evacuation
- less chips remain inside of the machine
- no malfunctions due to chips
- reduction of suction power
- noise reduced

Notes

- constant basic dimensions a and D1
- Z = 4 for feed rate 20 - 30 m/min
- Z = 6 for feed rate 30 - 45 m/min
- machines must be equipped with i-system
- sense of rotation according to DIN-EN 50144

R	Ø D	Ø D1	a	b	Ø d	Z	Ident-No. [L]	Ident-No. [R]
1,0	76	70	17.5	23	HSK 25R	4	180542	180543
1,5	76	70	18.0	23	HSK 25R	4	180544	180545
2,0	76	70	18.5	23	HSK 25R	4	180546	180547
2,5	78	70	19.0	23	HSK 25R	4	180548 s	180549 s
3,0	78	70	19.5	23	HSK 25R	4	180550	180551
3,5	84	70	20.0	23	HSK 25R	4	180552 s	180553 s
4,0	84	70	20.5	23	HSK 25R	4	180554 s	180555 s
4,5	84	70	21.0	23	HSK 25R	4	180556 s	180557 s
5,0	84	70	21.5	23	HSK 25R	4	180558 s	180559 s
[mm]	[mm]	[mm]	[mm]	[mm]	[mm]			

R	Ø D	Ø D1	a	b	Ø d	Z	Ident-No. [L]	Ident-No. [R]
1,0	76	70	17.5	23	HSK 25R	6	180560 s	180561 s
1,5	76	70	18.0	23	HSK 25R	6	180562	180563
2,0	76	70	18.5	23	HSK 25R	6	180564	180565
2,5	78	70	19.0	23	HSK 25R	6	180566 s	180567 s
3,0	78	70	19.5	23	HSK 25R	6	180568 s	180569 s
3,5	84	70	20.0	23	HSK 25R	6	180570 s	180571 s
4,0	84	70	20.5	23	HSK 25R	6	180572 s	180573 s
4,5	84	70	21.0	23	HSK 25R	6	180574 s	180575 s
5,0	84	70	21.5	23	HSK 25R	6	180576 s	180577 s
[mm]	[mm]	[mm]	[mm]	[mm]	[mm]			

Spare parts	Dimension	Class-No.	Ident-No.
Screws	M10x1,25x32 SW8	995190	177780
Shim Rings	18x25x1,0 DIN 988	995440	177781
Locking Rings	25x1,2 DIN 472	995460	177782
	[mm]		

222812

Edge Rounding Cutters DP HSK 25R - IMA

Product

Drawing

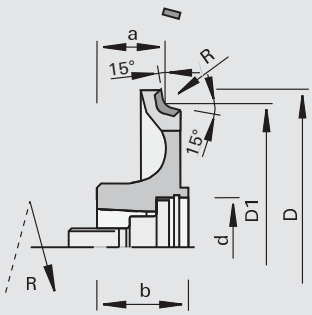

LEUCO topline

LEUCO i-system

polycrystalline diamond [DP]

MEC

Machine / Application

- edge banding machines IMA
- for chamfering of solid wood, veneer and plastic edge bands

Design

- polished face
- precise clearance angle
- with shear angle
- runout angle 15°

Advantages

- optimum cutting quality thanks to high concenctric accuracy and precise tool balancing
- optimized chip removal thanks to internal chip evacuation
- less chips remain inside of the machine
- no malfunctions due to chips
- reduction of suction power
- noise reduced

Notes

- constant basic dimensions a and D1
- Z = 4 for feed rate 20 - 30 m/min
- Z = 6 for feed rate 30 - 45 m/min
- machines must be equipped with i-system
- sense of rotation according to DIN-EN 50144

R	Ø D	Ø D1	a	b	Ø d	Z	Ident-No. [L]	Ident-No. [R]
1,0	76	70	17.5	23	HSK 25R	4	184923	184924
1,3	76	70	17.8	23	HSK 25R	4	184927 s	184928 s
1,5	76	70	18.0	23	HSK 25R	4	184921	184922
2,0	76	70	18.5	23	HSK 25R	4	184919	184920
2,5	78	70	19.0	23	HSK 25R	4	184925 s	184926 s
3,0	78	70	19.5	23	HSK 25R	4	184917	184918
[mm]	[mm]	[mm]	[mm]	[mm]	[mm]			

R	Ø D	Ø D1	a	b	Ø d	Z	Ident-No. [L]	Ident-No. [R]
1,0	76	70	17.5	23	HSK 25R	6	184939 s	184940 s
1,3	76	70	17.8	23	HSK 25R	6	184937 s	184938 s
1,5	76	70	18.0	23	HSK 25R	6	184935 s	184936 s
2,0	76	70	18.5	23	HSK 25R	6	184933 s	184934 s
2,5	78	70	19.0	23	HSK 25R	6	184931 s	184932 s
3,0	78	70	19.5	23	HSK 25R	6	184929 s	184930 s
[mm]	[mm]	[mm]	[mm]	[mm]	[mm]			

Spare parts	Dimension	Class-No.	Ident-No.
Screws	M10x1,25x32 SW8	995190	177780
Shim Rings	18x25x1,0 DIN 988	995440	177781
Locking Rings	25x1,2 DIN 472	995460	177782
	[mm]		

222812

Edge Chamfering Cutters DP HSK 25R - Homag FF, IMA

Product

Drawing

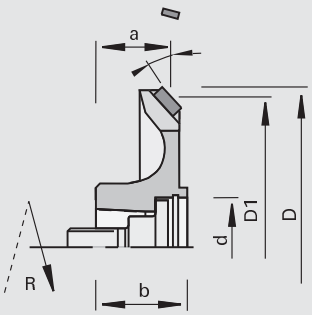

LEUCO topline

LEUCO i-system

polycrystalline diamond [DP]

MEC

Machine / Application

- edge banding machines Homag aggregate FF, IMA
- for chamfering of solid wood, veneer and plastic edge bands

Design

- polished face
- high-finish clearance angle
- with shear angle

Advantages

- optimum cutting quality thanks to high concenctric accuracy and precise tool balancing
- optimized chip removal thanks to internal chip evacuation
- less chips remain inside of the machine
- no malfunctions due to chips
- reduction of suction power
- noise reduced

Notes

- constant basic dimensions a and D1
- Z = 4 for feed rate 20 - 30 m/min
- Z = 6 for feed rate 30 - 45 m/min
- machines must be equipped with i-system
- sense of rotation according to DIN-EN 50144

Chamfer∢	Ø D	Ø D1	a	b	Ø d	Z	Ident-No. [L]	Ident-No. [R]
20	73	70	16.5	22.2	HSK 25R	4	180578	180579
45	73	70	17.5	22.2	HSK 25R	4	180580 s	180581 s
20	73	70	16.5	22.2	HSK 25R	6	180582 s	180583 s
45	73	70	17.5	22.2	HSK 25R	6	180584 s	180585 s
[°]	[mm]	[mm]	[mm]	[mm]	[mm]			

Spare parts	Dimension	Class-No.	Ident-No.
Screws	M10x1,25x32 SW8	995190	177780
Shim Rings	18x25x1,0 DIN 988	995440	177781
Locking Rings	25x1,2 DIN 472	995460	177782
	[mm]		

222812

Edge Rounding Cutters CM DP - Brandt

Product

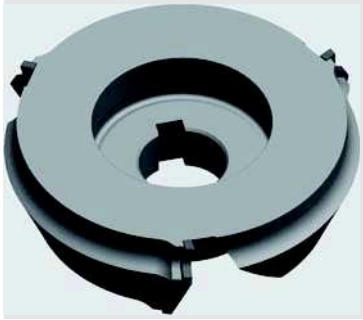

Drawing

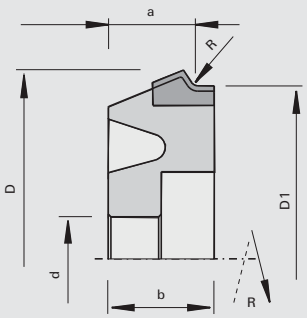

LEUCO topline

LEUCO DIA

polycrystalline diamond [DP]

MEC

Machine / Application

- edge banding machines Brandt
- for rounding of solid wood, veneer and plastic edge bands

Design

- with shear angle
- polished face and high-finish clearance angle
- resharpenable area approx. 2 mm
- n max = 24.000 min-1

Advantages

- optimized chip removal thanks to ChipMeister version
- less chips remain inside of the machine
- no malfunctions due to chips
- reduced suction performance
- low noise level

Notes

- sense of rotation according to DIN-EN 50144

R	Ø D	Ø D1	a	b	Ø d	Z	DKN	Ident-No. [L]	Ident-No. [R]
2	70.57	65,08	17.8	20	16	3	5x2,3	183169 s	183168 s
[mm]	[mm]	[mm]	[mm]	[mm]	[mm]		[mm]		

222812

Edge Chamfering Cutters CM DP - Brandt

Product

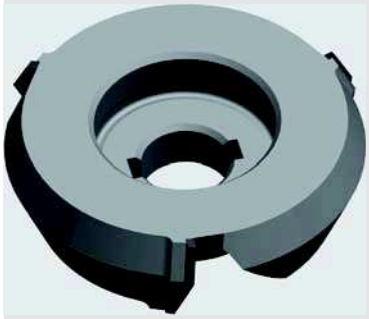

Drawing

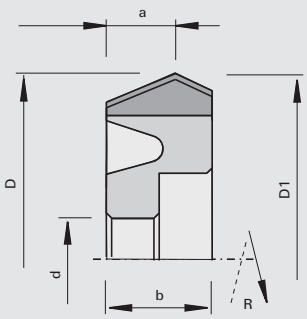

LEUCO topline

LEUCO DIA

polycrystalline diamond [DP]

MEC

Machine / Application

- edge banding machines Brandt
- for chamfering of solid wood, veneer and plastic edge bands

Design

- with shear angle
- polished face and high-finish clearance angle
- resharpenable area approx. 2 mm
- n max = 24.000 min-1

Advantages

- optimized chip removal thanks to ChipMeister version
- less chips remain inside of the machine
- no malfunctions due to chips
- reduced suction performance
- low noise level

Notes

- sense of rotation according to DIN-EN 50144

Chamfer∢	Ø D	Ø D1	a	b	Ø d	Z	DKN	Ident-No. [L]	Ident-No. [R]
45	70.6	69,98	13.07	20	16	3	5x2,3	183171 s	183170 s
[°]	[mm]	[mm]	[mm]	[mm]	[mm]		[mm]		

222020

Panel Raising Cutters DP Postforming - Homag

Product

Drawing

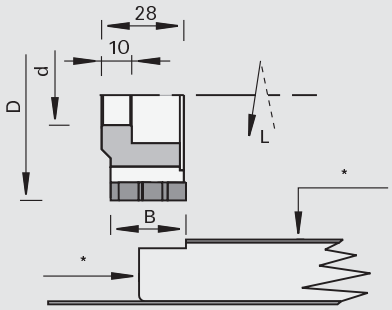

polycrystalline diamond [DP]

MEC

Machine / Application
- postforming machines Homag
- for panel raising of melamine-, paper-, HPL-laminated and veneered panels during the direct postforming process

Design
- resharpenable area 3.5 mm
- inside edge Z = 9
- shear angle and extreme division of cutting pressure
- n max = 24,000 min-1

Advantages
- no need for extra scoring station

Notes
- with inlay profiles
- application with feed
- * tracing with copy wheel
- sense of rotation see drawing

Ø D	B	b	Ø d	Z	DKN	Ident-No. [L]	Ident-No. [R]
70	25	10	20	9+3+3	6x2,8	179021 s	179022 s
[mm]	[mm]	[mm]	[mm]		[mm]		

222020

Panel Raising Cutters DP HSK 25R Postforming for inlay profiles - Homag

Product

Drawing

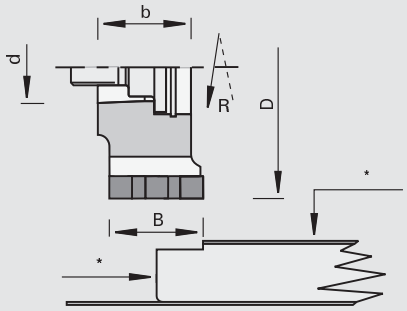

polycrystalline diamond [DP]

MEC

Machine / Application
- postforming machines Homag
- for panel raising of melamine-, paper-, HPL-laminated and veneered panels during the direct postforming process

Design
- resharpenable area 3.5 mm
- inside edge Z = 9 resp. Z = 12
- shear angle and extreme division of cutting pressure
- n max = 24,000 min-1

Advantages
- optimum cutting quality thanks to high concenctric accuracy and precise tool balancing
- no need for extra scoring station

Notes
- with inlay profiles
- application with feed
- * tracing with copy wheel
- sense of rotation see drawing

Ø D	B	b	Ø d	Z	Recommended feed	Ident-No. [L]	Ident-No. [R]
70	25	28	HSK 25R	9+3+3	25	179020 s	179019 s
70	25	28	HSK 25R	12+6+6	35	180464 s	180463 s
[mm]	[mm]	[mm]	[mm]		[m/min]		

Spare parts	Dimension	Class-No.	Ident-No.
Screws	M10x1,25x32 SW8	995190	177780
Shim Rings	18x25x1,0 DIN 988	995440	177781
Locking Rings	25x1,2 DIN 472	995460	177782
	[mm]		

222020

Panel Raising Cutters DP HSK 25R Postforming for U and L profiles - Homag

Product

Drawing

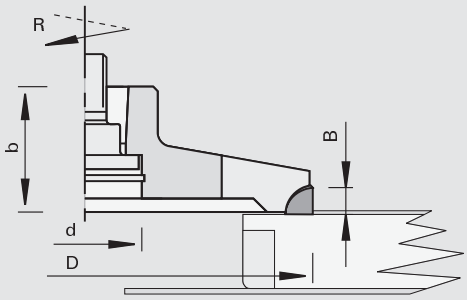

polycrystalline diamond [DP]

MEC

Machine / Application
- postforming machines Homag
- for panel raising during the direct postforming process

Design
- with shear angle
- resharpenable area 3.5 mm
- n max = 24,000 min-1

Advantages
- optimum cutting quality thanks to high concenctric accuracy and precise tool balancing

Notes
- for panel raising of the U profile and flush-cutting of the L profile
- application against feed
- sense of rotation according to DIN-EN 50144

Ø D	B	b	Ø d	Z	Ident-No. [R]
100	5	28	HSK 25R	4	177702 s
[mm]	[mm]	[mm]	[mm]		

Spare parts	Dimension	Class-No.	Ident-No.
Screws	M10x1,25x32 SW8	995190	177780
Shim Rings	18x25x1,0 DIN 988	995440	177781
Locking Rings	25x1,2 DIN 472	995460	177782
	[mm]		

209080

Scribing Cutterheads DP Postforming - Homag, IMA

Product

Drawing

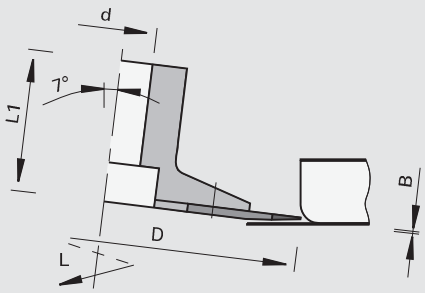

polycrystalline diamond [DP]

MEC

Machine / Application
- postforming machines Homag, IMA
- for scribing of the radii during the postforming process

Design
- exchangeable cutting edges
- straight cutter axis
- tooth configuration: symmetrical design for all radii
- n max = 9,000 min-1

Advantages

Notes
- for use without inlay strip
- application against feed
- LEUCODIA cutter inserts to be installed only in sets (packing unit 4 pieces)
- B=0.5 mm not recommended for butted-up workpieces; in this case B=1.2 mm should be used instead
- sense of rotation see drawing

Ø D	B	Ø d	L1	Z	DKN	Ident-No. [L]	Ident-No. [R]
125	0,5	20	45	4	6x3	180073 &	180074 s
125	0,8	20	45	4	6x3	180955 &	180956 s
125	1,2	20	45	4	6x3	180830 &	180831 s
[mm]	[mm]	[mm]	[mm]		[mm]		

Spare parts	Class-No.	Ident-No. [L]	Ident-No. [R]
LEUCODIA inserts "B" 0.5 mm with countersunk screws	232921	180063	180064
LEUCODIA inserts "B" 0.8 mm with countersunk screws	232921	180959	180960 s
LEUCODIA inserts "B" 1.2 mm with countersunk screws	232921	180834	180835 s
Countersunk Flat Headed Screws	995125		178722
Screwdrivers	985730		171188

209080

Scribing Cutterheads DP HSK 25R Postforming - Homag

Product

Drawing

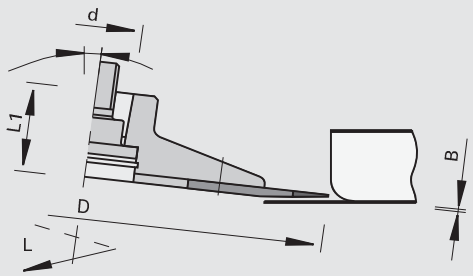

LEUCO DIA

polycrystalline diamond [DP]

MEC

Machine / Application

- postforming machines Homag
- for scribing of the radii during the postforming process

Design

- cutting edges parallel to cutter axis
- tooth configuration: symmetrical design for all radii
- n max = 9,000 min-1

Advantages

- optimum cutting quality thanks to high concentric and runout accuracy and precise tool balancing

Notes

- for use without inlay strip
- application against feed
- LEUCODIA cutter inserts to be installed only in sets (packing unit 4 pieces)
- B=0.5 mm not recommended for butted-up workpieces; in this case B=1.2 mm should be used instead
- sense of rotation see drawing

Ø D	B	Ø d	L1	Z	DKN	Ident-No. [L]	Ident-No. [R]
125	0,5	HSK 25R	26	4		180075 &	180076 &
125	0,8	HSK 25R	26	4	6x3	180957 &	180958 s
125	1,2	HSK 25R	26	4		180832 &	180833 s
[mm]	[mm]	[mm]	[mm]		[mm]		

Spare parts	Class-No.	Ident-No. [L]	Ident-No. [R]
LEUCODIA inserts "B" 0.5 mm with countersunk screws	232921	180063	180064
LEUCODIA inserts "B" 0.8 mm with countersunk screws	232921	180959	180960 s
LEUCODIA inserts "B" 1.2 mm with countersunk screws	232921	180834	180835 s
Screws	995190		177780
Shim Rings	995440		177781
Locking Rings	995460		177782
Countersunk Flat Headed Screws	995125		178722
Screwdrivers	985730		171188

164507

Circular Knives solide carbide for edge trimming Softforming - Homag

Product

Drawing

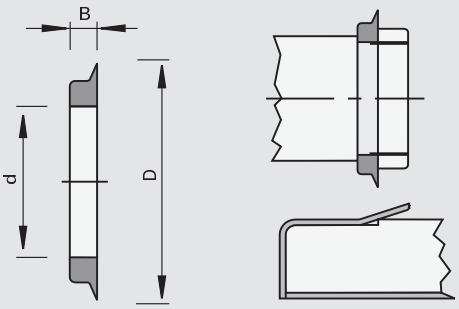

tungsten carbide [HW]

MEC

Machine / Application

- machines Homag
- for cutting of softforming inlay profiles

Design

- LEUCODUR solid carbide circular knife

Advantages

Notes

-

Ø D	B	Ø d	Ident-No.
40	3	25	172757
[mm]	[mm]	[mm]	

120405

V-groove profile cutterheads HW for aluminum composite materials - HOLZ-HER

Product

Drawing

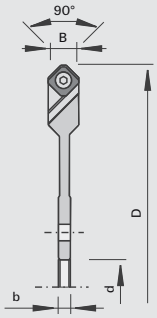

tungsten carbide [HW]

MAN

Machine / Application

- vertical panel sizing saws
- for the production of facade elements, frames, corner elements from aluminum composite material, gutbond etc.

Design

- anodized aluminum body
- cutting material: HL Solid 40

Advantages

- consistent cutting circles thanks to turnover knives
- simple handling thanks to quick knife change

Notes

- attachment screw for turnover knives executed with two Torx; T15 from front and T10 from back

Ø D	B	b	Ø d	Z	Ident-No.
244	16,5	6.5	30	8	182616
[mm]	[mm]	[mm]	[mm]		

Turnover Knives	B	H	S	Class-No.	Ident-No.
	14	14	2	151514	182079
	[mm]	[mm]	[mm]		

Spare parts	Dimension	Class-No.	Ident-No.
Countersunk Flat Headed Screws	M5x9 T10 / T15	995125	879309
Screwdrivers with handle	T10x80	985730	879329 o
Screwdrivers	T15x80	985730	171188
	[mm]		

120455

Grooving Cutterheads HW

Product

Drawing

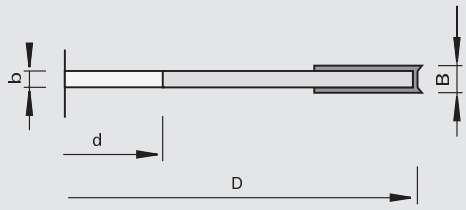

tungsten carbide [HW]

MAN

Machine / Application

- table shapers
- for chip-free grooving in solid woods and in wood-based panels

Design

- n = 6,500 - 11,000 min-1

Advantages

Notes

- application against feed with and across the grain

Ø D	B	b	Ø d	Ø dmax	Z	Ident-No.
125	4	3	30	40	4+4	167253
125	5	4	30	40	4+4	165922
[mm]	[mm]	[mm]	[mm]	[mm]		

Turnover Knives		B	H	S	Class-No.	Ident-No.
Spurs		14	14	1.2	150559	163701
Turnover Knives	for B = 4	18	18	1.95	150508	163699
Turnover Knives	for B = 5	18	18	2.5	150508	165906
		[mm]	[mm]	[mm]		

Spare parts	Dimension	For Ident-No.	Class-No.	Ident-No.
Countersunk Flat Headed Screws	M4x0,5x3,2 T9	167253	995125	163925
Countersunk Flat Headed Screws	M4x0,5x4,2 T9	165922	995125	165908
Special Nuts	M4x0,5x1,6		995290	163704
Special Nuts	M4x0,5x2,2	167253	995290	163703
Special Nuts	M4x0,5x2,75	165922	995290	165907
Screwdrivers	T9		985730	164344
	[mm]			

121455

Grooving Cutterheads HW - adjustable 4-15 mm

Product

Drawing

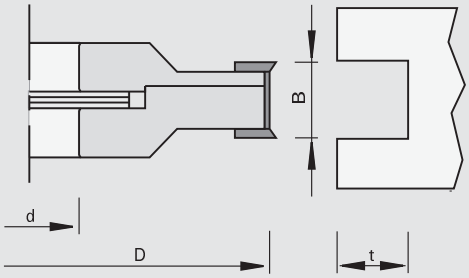

tungsten carbide [HW]

MAN

Machine / Application

- table shapers
- molders
- double end tenoners
- for chip-free grooving in solid woods and in wood-based panels

Design

- Ø 130 mm: n = 6,000 - 10,000 min-1
- Ø 160 mm: n = 5,000 - 8,000 min-1
- Ø 180 mm: n = 4,500 - 7,400 min-1

Advantages

Notes

- application against feed with and across the grain
- cutting width 4 - 7.5 mm two-piece
- cutting width 4 - 15 mm three-piece
- cutting width adjustable with shims in 0.1 mm increments
- single cutterheads and spacers secured against rotation with pins

Ø D	B	Ø d	Tmax	Z	DKN	Ident-No.
130	4 - 7,5	30	25	4+4		166509
180	4 - 7,5	30	35	8+4		168081
180	4 - 7,5	35	35	8+4	10x4	168083
180	4 - 7,5	40	35	8+4	12x5	168085 s
180	4 - 7,5	50	30	8+4		168087 s
180	4 - 15	30	35	8+2+4		168080
180	4 - 15	35	35	8+2+4	10x4	168082 s
180	4 - 15	40	35	8+2+4	12x5	168084 s
[mm]	[mm]	[mm]	[mm]		[mm]	

Turnover Knives	B	H	S	Class-No.	Ident-No.
Spurs	14	14	1.2	150559	163701
Turnover Knives	7,6	12	1.5	150515	052543
Turnover Knives	18	18	1.95	150508	163699
	[mm]	[mm]	[mm]		

Spare parts	Dimension	For Ident-No.	Class-No.	Ident-No.
Clamping Bars	B=7,2	168080, 168082, 168084	925300	168074
Set Screws	M5x12 DIN EN ISO 4028	168080, 168082, 168084	995161	050565
Counter Wedges	B=6,8	166509, 168083, 168085, 168087	925200	010751 #
Clamping Wedges	B=6,8	166509, 168083, 168085, 168087	925100	010750 #
Countersunk Flat Headed Screws	M4x0,5x3,2 T9	166509, 168081, 168083, 168085, 168087	995125	163925
Spacer Sets	50x3,5x30	166509	955521	166367
Spacer Sets	65x3,5x30	168080, 168081	955521	168075
Spacer Sets	70x3,5x35	168082, 168083	955521	168076
Spacer Sets	70x3,5x40	168084, 168085	955521	168077
Spacer Sets	90x3,5x50	168087	955521	168078
Special Nuts	M4x0,5x1,6	166509, 168081, 168083, 168085, 168087	995290	163704
Special Nuts	M4x0,5x2,2	166509, 168081, 168083, 168085, 168087	995290	163703
Screwdrivers	SW2,5x100	For all	985730	168010
Screwdrivers	T9	For all	985730	164344
	[mm]			

121455

Grooving Cutterheads HW - adjustable 8-24 mm

Product

Drawing

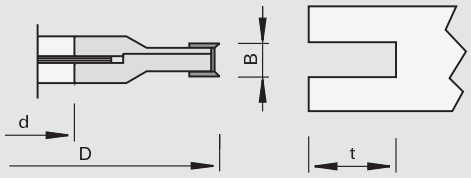

LEUCO DUR

tungsten carbide [HW]

MAN

Machine / Application

- table shapers
- molders
- double end tenoners
- for chip-free grooving in solid woods and in wood-based panels

Design

- n = 4,500 - 7,400 min-1

Advantages

Notes

- application against feed with and across the grain
- cutting width 8 - 15 mm and 12,6 - 24 mm two-piece
- cutting width adjustable with shims in 0.1 mm increments
- single cutterheads and spacers secured against rotation with pins

Ø D	B	Ø d	Tmax	Z	DKN	Ident-No.
180	8,0 - 15	30	35	4+4		178725
180	8,0 - 15	35	35	4+4	10x4	178726 &
180	8,0 - 15	40	35	4+4	12x5	178727 s
180	12,6 - 24	30	40	4+4		178729
180	12,6 - 24	35	40	4+4	10x4	178730 &
180	12,6 - 24	40	40	4+4	12x5	178731 s
[mm]	[mm]	[mm]	[mm]		[mm]	

Turnover Knives	B	H	S	Class-No.	Ident-No.
Spurs	14	14	2	150559	003079
Turnover Knives	7,6	12	1.5	150515	052543
Turnover Knives	12	12	1.5	150515	003080
	[mm]	[mm]	[mm]		

Spare parts	Dimension	For Ident-No.	Class-No.	Ident-No.
Clamping Bars	B=10	178729, 178730, 178731	925300	164526
Clamping Bars	B=7,2	178725, 178726, 178727	925300	168074
Countersunk Flat Headed Screws	M5x6 T20	For all	995125	176199
Set Screws	M5x20 DIN EN ISO 4028	178725, 178726, 178727	995161	178741
Set Screws	M6x20 DIN EN ISO 4028	178729, 178730, 178731	995161	178742
Spacer Sets	65x11,5x30	178729	955521	167278
Spacer Sets	70x11,5x35	178730	955521	167279
Spacer Sets	70x11,5x40	178731	955521	167280
Spacer Sets	65x7x30	178725	955521	167282
Spacer Sets	70x7x35	178726	955521	167283
Spacer Sets	70x7x40	178727	955521	167284
Screwdrivers	SW3x100	178729, 178730, 178731	985730	166090
Screwdrivers	SW2,5x100	178725, 178726, 178727	985730	168010
Screwdrivers	T20x100	For all	985730	166092
Adjusting Gauges	0,3	For all	985200	055883
	[mm]			

109085

Lamello Grooving Cutters HW

Product

Drawing

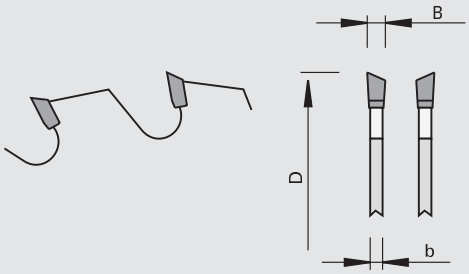

LEUCO DUR

tungsten carbide [HW]

MAN

Machine / Application

- machines Lamello, ELU
- for chip-free grooving of Lamello wood joints in solid woods and in wood-based panels

Design

Advantages

Notes

- application against feed with and across the grain

Ø D	B	b	Ø d	Z	NL	nmin-nmax		Ident-No.
100	4,0	3.45	22	6 WS	4/4,5/36	7600-13000	Lamello	189095
102	3,85	3.0	22	12 WS		7500-13100	ELU DS 140	188358
[mm]	[mm]	[mm]	[mm]			[min-1]		

209285

Lamello Grooving Cutters DP

Product

Drawing

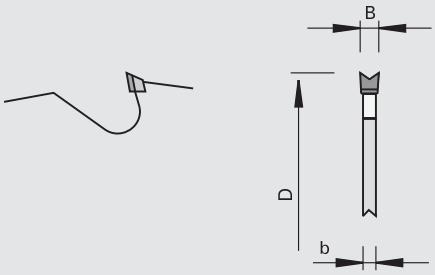

LEUCO DIAMAX

polycrystalline diamond [DP]

MAN

Machine / Application

- machines Lamello
- for chip-free grooving of Lamello wood joints in solid woods and in wood-based panels

Design

- reduced resharpenable area
- tooth configuration: concave
- n = 7,700 - 13,300 min-1

Advantages

Notes

- application against feed with and across the grain

Ø D	B	b	Ø d	Z	Ident-No.
100	3,95	4	22	4	178496
[mm]	[mm]	[mm]	[mm]		

209285

Lamello Grooving Cutters DP - Clamex P

Product

Drawing

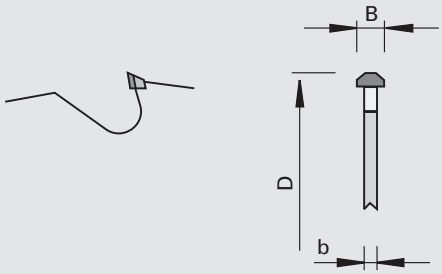

LEUCO DIA

polycrystalline diamond [DP]

MAN

Machine / Application
- CNC machining centers
- for chip-free grooving for Lamello Clamex P joints in solid woods and wood-based panels

Design
- not resharpenable
- tooth configuration: specific
- n = 7.700 - 13.300 min-1

Advantages

Notes
- application against feed with and across the grain
- can be used on CNC machines as a grooving cutter
- Mosquito Through-Hole Bits VHW for Lamello Clamex P see chapter Drill Bits

Ø D	B	b	Ø d	Z	NL		Ident-No.
100.4	7,0	4	30	3	4/6,6/48	for Lamello Clamex P	189711
[mm]	[mm]	[mm]	[mm]				

120455

Lamello Grooving Cutterheads HW

Product

Drawing

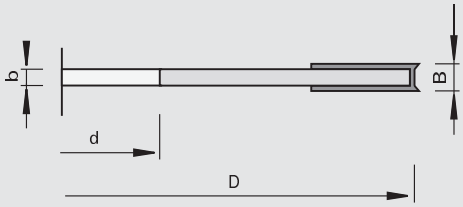

LEUCO DUR

tungsten carbide [HW]

MAN

Machine / Application
- machines Lamello
- for chip-free grooving of Lamello wood joints in solid woods and in wood-based panels

Design
- n = 7,700 - 13,300 min-1

Advantages

Notes
- application against feed with and across the grain

Ø D	B	b	Ø d	Z	NL	Ident-No.
100	4	4	22	4+4	4/4,5/36	164838
[mm]	[mm]	[mm]	[mm]			

Turnover Knives	B	H	S	Class-No.	Ident-No.
Spurs	14	14	1.2	150559	163701
Turnover Knives	18	18	1.95	150508	163699
	[mm]	[mm]	[mm]		

Spare parts		Dimension	Class-No.	Ident-No.
Countersunk Flat Headed Screws		M4x0,5x3,2 T9	995125	163925
Special Nuts	for profile knives	M4x0,5x2,2	995290	163703
Special Nuts	for spurs	M4x0,5x1,6	995290	163704
Screwdrivers		T9	985730	164344
		[mm]		

122415

Cutters HW for removing resin pockets

Product

Drawing

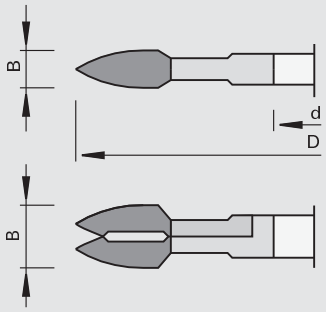

tungsten carbide [HW]

MAN

Machine / Application
- Mini-Spot machines
- for cutting out defects in solid woods

Design
- with alternating shear angle
- n max = 12,000 min-1

Advantages

Notes
- for patch sizes 1-4

Ø D	B	Ø d	Z	NL	Ident-No.
100	8	22	4	4/4,3/36	180469
100	15	22	4		70176420 o
[mm]	[mm]	[mm]			

109015

Grooving Cutters HW - portable routers

Product

Drawing

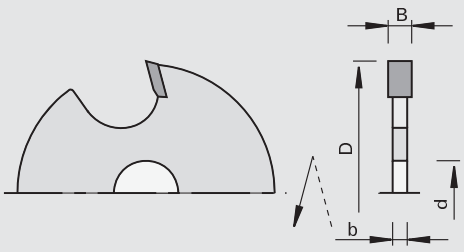

tungsten carbide [HW]

MAN

Machine / Application
- portable routers
- for grooving in solid woods and wood-based panels

Design
- two brazed flat-tooth cutting edges
- n max = 18,000 min-1

Advantages

Notes
- clamping elements: cutter arbor

Ø D	B	b	Ø d	Z	Ident-No.
40	1,8	1.0	8	2	001367
40	2,0	1.2	8	2	001370
40	2,5	1.5	8	2	001374
40	3,0	2.0	8	2	001377
40	3,5	2.5	8	2	001380
40	4,0	3.0	8	2	001383
[mm]	[mm]	[mm]	[mm]		

Spare parts	Dimension	Class-No.	Ident-No.
Arbors	8x8	997200	160363
	[mm]		

109015

Grooving Cutters HW - MAN

Product

Drawing

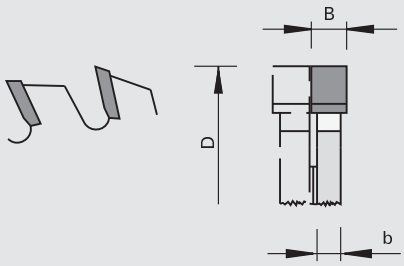

tungsten carbide [HW]

MAN

Machine / Application

- table shapers
- for chip-free grooving in solid woods and in wood-based panels

Design

Advantages

Notes

- application against feed with the grain (solid wood)
- application with feed only with MEC (wood-based panels)
- for Z = 12 and Z = 18 other groove widths are possible when tools are assembled as a set
- groove width calculation for tool sets: sum of all "b" + HW overlap left and right + shim thickness

Ø D	B	b	Ø d	Z	nmin-nmax	Ident-No.
125	1,5	0.8	30	12	6100-10500	188359
125	1,8	1.0	30	12	6100-10500	188360
125	2,0	1.2	30	12	6100-10500	188361
125	2,2	1.2	30	12	6100-10500	188362
125	2,5	1.4	30	12	6100-10500	188363
125	3,0	2.0	30	12	6100-10500	188364
125	3,5	2.5	30	12	6100-10500	188365
125	4,0	2.5	30	12	6100-10500	188366
125	4,5	3.0	30	12	6100-10500	188367
125	5,0	4.0	30	12	6100-10500	188368
125	6,0	4.0	30	12	6100-10500	188369
125	7,0	5.0	30	12	6100-10500	188370
125	8,0	5.0	30	12	6100-10500	188371
125	10,0	6.0	30	12	6100-10500	188372
150	1,5	0.8	30	12	5200-8800	188373
150	2,0	1.2	30	12	5200-8800	188375
150	2,2	1.2	30	12	5200-8800	188376
150	2,5	1.5	30	12	5200-8800	188377
150	3,0	2.0	30	12	5200-8800	188378
150	3,5	2.5	30	12	5200-8800	188379
150	4,0	3.0	30	12	5200-8800	188380
150	4,5	3.5	30	12	5200-8800	188381
150	5,0	4.0	30	12	5200-8800	188382
150	6,0	4.0	30	12	5200-8800	188383
150	7,0	5.0	30	12	5200-8800	188384
150	8,0	5.0	30	12	5200-8800	188385
150	9,0	6.0	30	12	5200-8800	188386
150	10,0	6.0	30	12	5200-8800	188387
[mm]	[mm]	[mm]	[mm]		[min-1]	

109010

Grooving Cutters HW

Product

Drawing

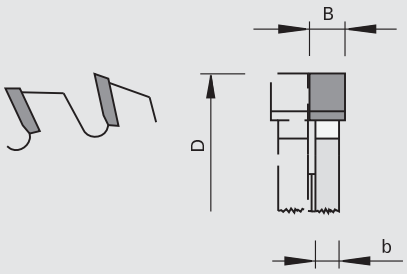

tungsten carbide [HW]

MEC

Machine / Application

- molders
- double end tenoners
- for chip-free grooving in solid woods and in wood-based panels

Design

Advantages

Notes

- for Z = 12 and Z = 18 other groove widths are possible when tools are assembled as a set
- groove width calculation for tool sets: sum of all "b" + HW overlap left and right + shim thickness

Ø D	B	b	Ø d	Z	DKN	nmax	Ident-No.
150	4,0	3.0	30	12		12700	160802
150	5,0	4.0	30	12		12700	001434
150	6,0	4.0	30	12		12700	161617
150	7,0	5.0	30	12		12700	161619
150	8,0	5.0	30	12		12700	161620
150	10	6.0	30	12		12700	161622
150	5,0	4.0	35	12	10x4	12700	001435 &
150	10	6.0	35	12	10x4	12700	161623 &
150	1,5	0.8	35	18	10x4	12700	001447
150	1,8	1.0	35	18	10x4	12700	001448
150	2,0	1.2	35	18	10x4	12700	001449
150	2,2	1.2	35	18	10x4	12700	001450
150	2,5	1.5	35	18	10x4	12700	001451
150	3,0	2.0	35	18	10x4	12700	001452
150	4,0	3.0	35	18	10x4	12700	001453
150	5,0	4.0	35	18	10x4	12700	001454
150	6,0	4.0	35	18	10x4	12700	161627
150	8,0	5.0	35	18	10x4	12700	161628
150	4,0	3.0	30	24		12700	169689
150	5,0	4.0	30	24		12700	169688
150	6,0	4.0	30	24		12700	169687
150	4,0	3.0	30	48 WS		12700	160804
180	4,0	3.0	30	12		10300	001442
180	5,0	4.0	30	12		10300	001443
180	6,0	4.0	30	12		10300	161624
180	8,0	5.0	30	12		10300	161625
180	10	6.0	30	12		10300	161626
180	4,0	3.0	30	18		10600	169685
180	5,0	4.0	30	18		10600	169684
180	8,0	5.0	30	18		10600	169683
180	10,0	6.0	30	18		10600	169682
196	6,0	5.0	30	12 WS		9600	163836
200	4,0	2.8	30	24			1527332 o
200	4,5	2.8	30	24			1527333 o
200	5,0	2.8	30	24			1527334 o
200	5,5	2.8	30	24			1527335 o
200	6,0	2.8	30	24			1527336 o
200	6,5	2.8	30	24			1527337 o
200	7,0	5.0	30	24			1527339 o
[mm]	[mm]	[mm]	[mm]		[mm]	[min-1]	

Ø D	B	b	Ø d	Z	DKN	nmax	Ident-No.
200	7,5	5.0	30	24			1527340 o
200	8,0	5.0	30	24			1527341 o
200	8,5	5.0	30	24			1527342 o
200	9,0	5.0	30	24			1527343 o
200	9,5	5.0	30	24			1527344 o
200	10	5.0	30	24			1527345 o
220	4,0	3.0	30	30			1521934 o
220	4,5	3.0	30	30			1521935 o
220	5,0	3.0	30	30			1521936 o
220	5,5	3.0	30	30			1521937 o
220	6,0	3.0	30	30			1521938 o
220	6,5	3.0	30	30			1521939 o
220	7,0	5.0	30	30			1521941 o
220	7,5	5.0	30	30			1521942 o
220	8,0	5.0	30	30			1521943 o
220	8,5	5.0	30	30			1521944 o
220	9,0	5.0	30	30			1521945 o
220	9,5	5.0	30	30			1521946 o
220	10	5.0	30	30			1521947 o
[mm]	[mm]	[mm]	[mm]		[mm]	[min-1]	

109010

Grooving Cutters HW - CNC machining center

Product

Drawing

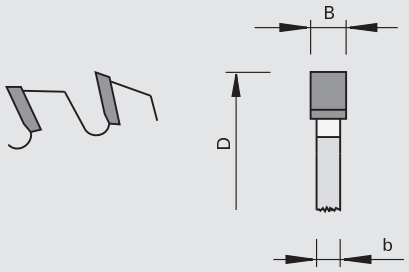

LEUCO DUR

tungsten carbide [HW]

MEC

Machine / Application

- CNC machining centers
- for chip-free grooving in solid woods and in wood-based panels

Design

- positive hook angle
- without shear angle
- pin holes with countersink
- tooth configuration: flat "F"
- cutting material: HW
- HL Board 06

Advantages

Notes

Ø D	B	b	Ø d	Z	NL		Ident-No.
100	3,2	2.2	30	20		Weeke	189571
100	4	3.0	30	20		Weeke	189647
100	5	3.0	30	20		Weeke	189260
120	4	3.0	35	30	4/6/50	Biesse, Felder Profit H22	189262
125	3,2	2.2	30	36	2 x 4/6,1/48	Weeke	189306
125	4,0	3.0	30	36	2 x 4/6,1/48		189995
[mm]	[mm]	[mm]	[mm]				

109080

Grooving Cutters "G5"

Product

Drawing

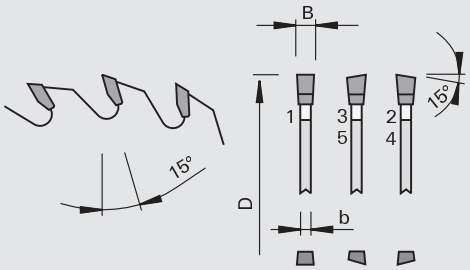

LEUCO g5 system

LEUCO DUR

tungsten carbide [HW]

MEC

Machine / Application

- Weeke BHX series
- CNC machining centers and aggregates
- for chip-free grooving in solid woods, raw and laminated wood-based panels and plastics

Design

- tooth configuration: G5
- cutting material: HW HL Board 03

Advantages

- excellent cutting qualtiy
- especially low noise level
- long edge lives also thanks to highly wear-resistant cutting material

Notes

Ø D	B	b	Ø d	Z	NL		Ident-No.
100	4,0	2.8	30	35		Weeke BHX Series 050/055	189994
100	5,0	4.0	30	35		Weeke BHX Series 050/055	191947
120	4,0	2.8	20	35			191948
120	5,0	4.0	20	35			191949
120	4,0	2.8	20	35	3/4,5/35	SCM / Morbidelli	191950 &
120	5,0	4.0	20	35	3/4,5/35	SCM / Morbidelli	191951 &
120	4,0	2.8	35	35	4/6,3/50	Biesse	191952 &
120	5,0	4.0	35	35	4/6,3/50	Biesse	191953 &
125	4,0	2.8	30	35	2 x 4/5,5/48	Weeke BHX Series 500 and other BAZ, BOF m/c and aggregates	189993
125	5,0	4.0	30	35	2 x 4/5,5/48	Weeke BHX 500 series and other machining centers and aggregates	191946
[mm]	[mm]	[mm]	[mm]				

209010

Grooving Cutters DP - machining centers

Product

Drawing

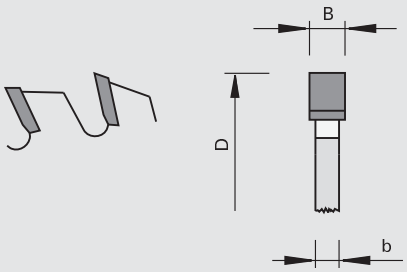

LEUCO DIA

polycrystalline diamond [DP]

MEC

Machine / Application

- CNC machining centers
- for chip-free grooving in solid woods and in wood-based panels

Design

- positive hook angle
- without shear angle
- pin holes with countersink
- tooth configuration: flat "F"

Advantages

Notes

Ø D	B	b	Ø d	Z	NL		Ident-No.
125	3,2	2.2	30	36	4/6,1/48 + 4/6,1/48	Weeke	189649 s
125	4	3	30	36	4/6,1/48 + 4/6,1/48	Weeke	189648 s
[mm]	[mm]	[mm]	[mm]				

209010

Grooving Cutters DP

Product

Drawing

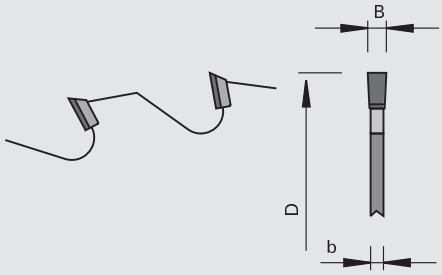

LEUCO DIA

polycrystalline diamond [DP]

MEC

Machine / Application

- double end tenoners
- edge banding machines
- for chip-free grooving in solid woods and in wood-based panels

Design

- resharpenable area 3.5 mm
- tooth configuration: flat
- n max = 10,000 min-1

Advantages

Notes

- application with feed
- number of teeth depends on the feed rate, the material to be cut and the desired cutting quality

Ø D	B	b	Ø d	Z	DKN	Ident-No.
180	4	3	35	12	10x4	178194 s
180	4	3	35	18	10x4	178195 s
180	4	3	35	24	10x4	178196 s
180	5	4	35	18	10x4	178197 s
180	5	4	35	24	10x4	178198 s
180	6	5	35	12	10x4	178199 s
180	6	5	35	18	10x4	178200 s
180	6	5	35	24	10x4	178201 s
180	8	7	35	12	10x4	178202 s
180	8	7	35	18	10x4	178203 s
180	8	7	35	24	10x4	178204 s
180	5	4	35	12	10x4	178205 s
[mm]	[mm]	[mm]	[mm]		[mm]	

123455

Grooving Cutter Set HW

Product

Drawing

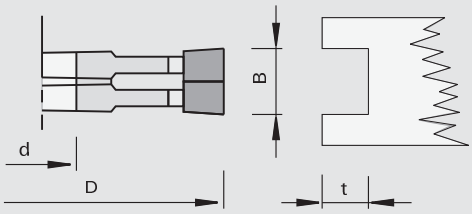

LEUCO DUR

tungsten carbide [HW]

MAN

Machine / Application

- table shapers
- molders
- double end tenoners
- for chip-free grooving in solid woods and in wood-based panels

Design

Advantages

Notes

- application with and across the grain (solid wood)
- cutting width adjustable with shims in 0.1 mm increments

Ø D	B	Ø d	Tmax	Z	KN	nmin-nmax	Ident-No.
120	1,8 - 3,4	30	18	4+4		6400-10000	006188 s
120	2,2 - 4,0	30	18	4+4		6400-10000	006189 s
150	4,0 - 7,5	30	37	4+4		5200-9000	006190 s
150	7,5 - 14,5	30	37	4+4		5200-9000	006191 s
140	2,2 - 4,0	30	20	4+4		5400-9000	171136
[mm]	[mm]	[mm]	[mm]		[mm]	[min-1]	

120215

Jointing Cutterheads HW

Product

Drawing

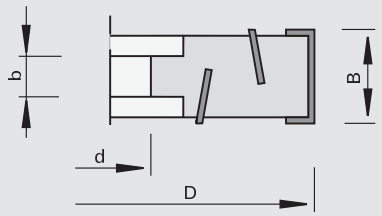

LEUCO DUR

tungsten carbide [HW]

MAN

Machine / Application

- table shapers
- for chip-free jointing of plastic-laminated panels

Design

- opposing shear angle
- cutting material: HW HL Board 05

Advantages

Notes

- application against feed with and across the grain

Ø D	B	b	Ø d	Z	DKN	nmin-nmax	Ident-No.
100	34	35	30	3+3	8x3	7700-13300	171972 s
125	56	54	30	3+3	8x3	6100-10500	177004
150	56	54	30	3+3	8x3	5200-8800	177006
180	56	25	35	3+3	10x4	4200-7200	177002
[mm]	[mm]	[mm]	[mm]		[mm]	[min-1]	

Turnover Knives	B	H	S	Class-No.	Ident-No.
	20	12	1.5	150515	003082
	30	12	1.5	150515	003083
	[mm]	[mm]	[mm]		

Spare parts	Dimension	For Ident-No.	Class-No.	Ident-No.
Clamping Bars	B=17	171972	925300	167971
Pressure Jaws	28x11x6	177002, 177004, 177006	925300	180344
Clamping Parts	12x8,5/M6L	177002, 177004, 177006	925100	180356
Set Screws	M8x12 DIN EN ISO 4028	171972	995161	180001
Clamping Setscrews	M6/M6Lx18	177002, 177004, 177006	995161	180338
Screwdrivers	SW4x100	171972	985730	166091
Screwdrivers	T15x80	177002, 177004, 177006	985730	171188
	[mm]			

222220

DIAMAX Jointing Cutters DP LowNoise

Product

Drawing

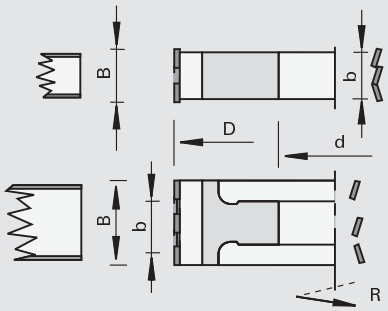

LOW

LEUCO DIAMAX

polycrystalline diamond [DP]

MEC

Machine / Application

- through feed machines
- for noise-reduced, chip-free jointing of melamine-, paper-, HPL-laminated, foiled and veneered panels

Design

- convex and non-convex design
- symmetrical and asymmetrical design
- for left and right hand rotation
- opposing shear angle
- spiral cutting edges
- resharpening area 1.5 mm

Advantages

- optimal glueing of edges
- optimized as to noise level and chip flow

Notes

- sense of rotation according to DIN-EN 50144

Ø D	B	b	Ø d	Z	DKN	nmax			Ident-No. [L]	Ident-No. [R]
60	64	62	25	2+2	8x3,3	31000	Felder/Format 4	asymmetrical	184651	184650
85	45	45	30	3+3	8x3,3	22000	Ott	asymmetrical	184647	184646
85	65	45	30	3+3	8x3,3	22000	Ott	asymmetrical	184649	184648
100	34	37.6	30	3+3	8x3,3	19000	IMA, Brandt	asymmetrical	184673	184672
100	45,5	61	30	2+2	8x3,3	19000	EBM / Hebrock	asymmetrical	184288	184287
100	48	25	25	2+2	8x3,3	19000	Brandt Ambition 1110 F (KDF 110), 1120 FC (KDF 120 C)	asymmetrical	185113	185112
100	48	25	30	2+2	8x3,3	19000	HOLZ-HER up to 2008, SCM-Stefani	asymmetrical	184283	184284
100	48	40.6	30	3+3	8x3,3	19000	IMA, Brandt, SCM, Biesse	asymmetrical	184210	184211
100	63	39.5	30	2+2	8x3,3	19000	HOLZ-HER	asymmetrical	184279 s	184280 s
100	63	40.6	30	3+3	8x3,3	19000	Brandt	asymmetrical	184212	184213
100	64	25	30	2+2	8x3,3	19000	HOLZ-HER up to 2008, SCM-Stefani, EBM	asymmetrical	184281	184282
100	64	40.6	30	3+3	8x3,3	19000	SCM-Stefani	asymmetrical	184285 s	184286 s
125	28	37.6	30	3+3	8x3,3	15000	Homag	symmetrical	184645	184645
125	36	40	30	3+3	8x3,3	15000	Homag	symmetrical	184752	184752
125	43	40	30	3+3	8x3,3	15000	Homag	symmetrical	184029	184029
125	43	40.6	30	3+3	8x3,3	15000	Homag, IMA aggregate 08.378	asymmetrical	184943	184944
125	43	57	30	3+3	8x3,3	15000	IMA aggregate 08.379	asymmetrical	184949	184950
125	63	40	30	3+3	8x3,3	15000	Homag	symmetrical	184030	184030
125	63	40.6	30	3+3	8x3,3	15000	IMA aggregate 08.378	asymmetrical	184945	184946
125	63	57	30	3+3	8x3,3	15000	IMA aggregate 08.379	asymmetrical	184951	184952
150	43	40	30	4+4	8x3,3	12000	Homag reference jointing (WZ10/WZ14), aggregate AF11/AW22/AW12	asymmetrical	185258 s	185257 s
150	63	40	30	4+4	8x3,3	12000	Homag reference jointing (WZ10/WZ14), aggregate AF11/AW22/AW12	asymmetrical	184763	184764
[mm]	[mm]	[mm]	[mm]		[mm]	[min-1]				

mounted on Hydro-Bushing Ident-No. 184310

Ø D	B	Ø d	Z	nmax			Ident-No. [L]	Ident-No. [R]
125	43	70/30	3+3	15000	IMA aggregate 08.378 Hydro	asymmetrical	184965 s	184966 s
125	43	70/30	3+3	15000	IMA aggregate 08.379 Hydro	asymmetrical	185115 s	185114 s
125	63	70/30	3+3	15000	IMA aggregate 08.378 Hydro	asymmetrical	184967 s	184968 s
125	63	70/30	3+3	15000	IMA aggregate 08.379 Hydro	asymmetrical	185117 s	185116 s
[mm]	[mm]	[mm]		[min-1]				

220220

DIAMAX Smart-JointerPlus Jointing Cutterhead DP

Product

Drawing

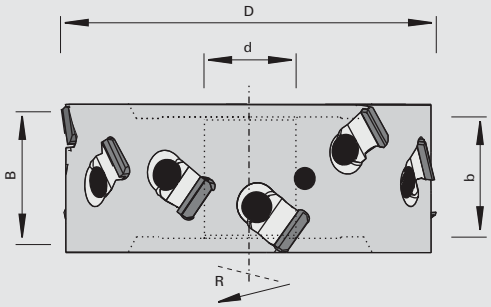

LEUCO smart jointer plus

polycrystalline diamond [DP]

MEC

Machine / Application

- edge banding machines
- for jump-milling units for the jointing of solid wood and wood-based panels with and without coating with special focus on the reduction of unbalance and noise

Design

- aluminum body
- with exchangeable DP cutting edges
- DP cutting edges with integrated steel gullet
- shear angle 35°
- asymmetrical design
- resharpening area 1.5 mm
- n max = 13,000 min-1

Advantages

- noise reduction of up to 3 dB (A)
- reduced and power consumption thanks to low-weight design with aluminum body
- easy on spindle bearing thanks to less unbalance
- exchangeable DP cutting edges incl. wear-resistant exchangeable chip evacuation gap
- excellent cutting quality thanks to large shear angle

Notes

- Attention: when changing the cutting edges please observe operating instructions
- DP cutting edges packing unit 4 pieces
- plug insert packing unit 2 pieces
- sense of rotation according to DIN-EN 50144

Ø D	B	b	Ø d	Z	DKN	nmax			Ident-No. [L]	Ident-No. [R]
100	43,2	40.6	25	2	8x3,3	13000	Brandt 1110F (KDF 110)	asymmetrical	185299	185300
100	43,2	40.6	30	3	8x3,3	13000	Brandt	asymmetrical	185251	185252
100	65	40.6	30	3	8x3,3	13000	Brandt	asymmetrical	185253	185254
100	85	40.6	30	3	8x3,3	13000	Brandt	asymmetrical	185255 s	185256 s
100	105	85	30	3	8x3,3	13000	Brandt	asymmetrical	185301 s	185302 s
[mm]	[mm]	[mm]	[mm]		[mm]	[min-1]				

Spare parts	Dimension	Class-No.	Ident-No.
Countersunk Flat Headed Screws	M5x13,5 T20	995125	185080
DP cutting edges	17,2x8,9x14,2	232239	185250
	[mm]		

Spare parts	Dimension	Class-No.	Ident-No.
Torque Screwdrivers	5,0 Nm	985730	185292
plug insert Torx	T20	985730	185293
	[mm]		

220220

DIAMAX SmartJointer Jointing Cutterhead DP

Product

Drawing

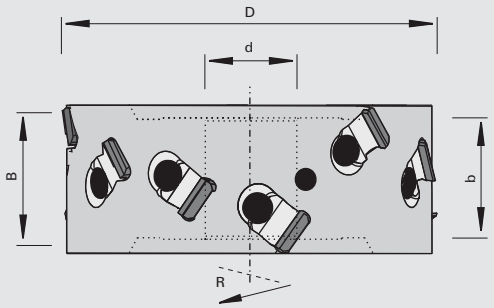

LEUCO smart jointer

polycrystalline diamond [DP]

MEC

Machine / Application

- edge banding machines
- for jump-milling units for the jointing of melamine-, paper-, HPL-laminated, foiled and veneered panels

Design

- aluminum body
- symmetrical and asymmetrical design
- resharpening area 1,5 mm

Advantages

- low noise level
- low-weight design thanks to aluminum body
- exchangeable DP cutting edges incl. wear-resistant chip evacuation gap

Notes

- sense of rotation according to DIN-EN 50144

Ø D	B	b	Ø d	Z	DKN	nmax			Ident-No. [L]	Ident-No. [R]
85	45	47	30	3+3	8x3,3	15500	Ott	asymmetrical	183911 s	183910 s
100	43,5	25	30	3+3	8x3,3	13000	HOLZ-HER, SCM	asymmetrical	183917	183916
100	43,5	61	30	3+3	8x3,3	13000	EBM	asymmetrical	183913 s	183912 s
100	63	25	30	3+3	8x3,3	13000	HOLZ-HER, SCM	asymmetrical	183919	183918
100	65	40.6	30	3+3	8x3,3	13000	SCM	asymmetrical	183925 s	183924 s
100	65	44	30	3+3	8x3,3	13000	Ott	asymmetrical	183921 s	183920 s
125	43	40.6	30	3+3	8x3,3	10500	Homag, IMA aggregate 08.378	asymmetrical	184957 s	184958 s
125	43	57	30	3+3	8x3,3	10500	IMA aggregate 08.379	asymmetrical	184983 s	184984 s
125	43,5	40	30	3+3	8x3,3	10500	Homag	symmetrical	183926	183926
125	43,5	40	30	3+3	8x3,3	10500	Homag	asymmetrical	183929 s	183928 s
125	63	40	30	3+3	8x3,3	10500	Homag	symmetrical	184708	184708
125	63	40.6	30	3+3	8x3,3	10500	IMA aggregate 08.378	asymmetrical	184959 s	184960 s
125	63	57	30	3+3	8x3,3	10500	IMA aggregate 08.379	asymmetrical	184985 s	184986 s
125	65	40	30	3+3	8x3,3	10500	Ott	asymmetrical	183931 s	183930 s
[mm]	[mm]	[mm]	[mm]		[mm]	[min-1]				

mounted on Hydro-Bushing Ident-No. 184310

Ø D	B	Ø d	Z	nmax			Ident-No. [L]	Ident-No. [R]
125	43	70/30	3+3	10500	IMA aggregate 08.378 Hydro	asymmetrical	184973 s	184974 s
125	43	70/30	3+3	10500	IMA aggregate 08.379 Hydro	asymmetrical	185123 s	185122 s
125	63	70/30	3+3	10500	IMA aggregate 08.378 Hydro	asymmetrical	184975 s	184976 s
125	63	70/30	3+3	10500	IMA aggregate 08.379 Hydro	asymmetrical	185125 s	185124 s
[mm]	[mm]	[mm]		[min-1]				

222220

DIAMAX Jointing Cutters CM DP - Biesse

Product

Drawing

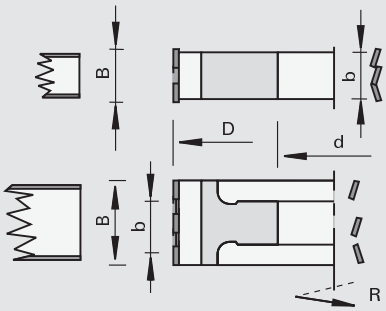

LEUCO DIAMAX

polycrystalline diamond [DP]

MEC

Machine / Application

- through feed machines
- for chip-free jointing of melamine-, paper-, HPL-laminated, foiled and veneered panels

Design

- crowned design
- symmetrical design
- applicable left and right
- opposing shear angle
- spiral cutting layout
- resharpenable area 1.5 mm

Advantages

- optimal glueing of edges
- optimized chip removal thanks to ChipMeister version
- less chips remain inside of the machine
- no malfunctions due to chips
- reduction of suction power
- low noise level

Notes

- sense of rotation according to DIN-EN 50144

Ø D	B	b	Ø d	Z	DKN	nmax		Ident-No. [R]
80	32	53	30	3+3	8x3	23300	Biesse Akron 400	183694 s
80	45	53	30	3+3	8x3	23300	Biesse Akron 400	183695 s
80	65	53	30	3+3	8x3	23300	Biesse Akron 400	183696 s
100	45	75	30	3+3	8x3	18500	Biesse Akron 600/800	183697 s
100	65	75	30	3+3	8x3	18500	Biesse Akron 600/800	183698 s
[mm]	[mm]	[mm]	[mm]		[mm]	[min-1]		

222220

DIAMAX Jointing Cutters CM DP- HOLZ-HER, Homag

Product

Drawing

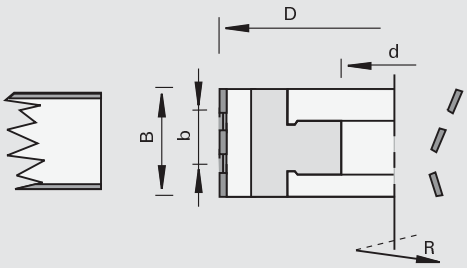

LEUCO DIAMAX

polycrystalline diamond [DP]

MEC

Machine / Application

- through feed machines HOLZ-HER
- for chip-free jointing of melamine-, paper-, HPL-laminated, foiled and veneered panels

Design

- opposing shear angle
- spiral cutting edges
- resharpening area 1.5 mm

Advantages

- optimized chip removal thanks to ChipMeister version
- noise reduced

Notes

- sense of rotation according to DIN-EN 50144

Ø D	B	b	Ø d	Z	DKN	nmax		Ident-No. [L]	Ident-No. [R]
70	54	31	30	2	8x3,3	18000	HOLZ-HER aggregate 1801	182515	182514
70	48	41	30	2+2	8x3,3	18000	HOLZ-HER Arcus 1801	183073	183074
70	64	41	30	2+2	8x3,3	18000	HOLZ-HER Arcus 1801	183075	183076
100	48	25	30	2+2	8x3,3	18000	HOLZ-HER aggregate 1961 from 2008	182690 s	182691 s
100	53	25	30	2+2	8x3,3	18000	HOLZ-HER aggregate 1961	182173 s	182172 s
100	63	25	30	2+2	8x3,3	18000	HOLZ-HER aggregate 1961 from 2008, Homag	182692 s	182693 s
[mm]	[mm]	[mm]	[mm]		[mm]	[min-1]			

222220

DIAMAX Jointing Cutters CM DP - Homag

Product

Drawing

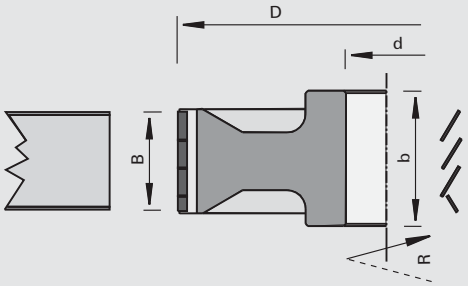

LEUCO DIAMAX

polycrystalline diamond [DP]

MEC

Machine / Application

- through feed machines Homag
- for chip-free jointing of melamine-, paper-, HPL-laminated and veneered panels

Design

- opposing shear angle
- spiral cutting edges
- resharpenable area 1.5 mm

Advantages

- high quality in the decor
- optimized chip removal thanks to ChipMeister version (with i-system jointing aggregate)
- noise reduced

Notes

- application with or against feed
- sense of rotation according to DIN-EN 50144

Ø D	B	b	Ø d	Z	DKN	nmax	Ident-No. [L]	Ident-No. [R]
180	63	58.5	35	4+4	10x3,3	10000	181261 s	181262 s
[mm]	[mm]	[mm]	[mm]		[mm]	[min-1]		

222020

Jointing Cutter CM DP - one-part

Product

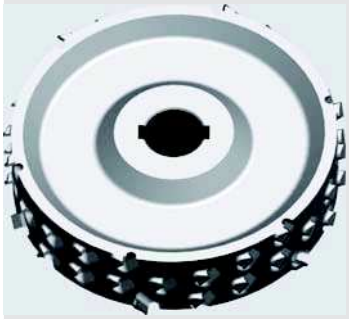

Drawing

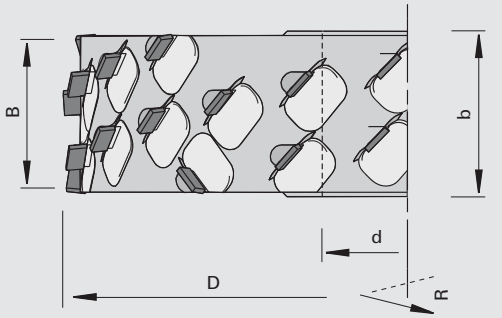

polycrystalline diamond [DP]

MEC

Machine / Application

- double end tenoners
- edge banding machines
- for use on milling aggregates
- for chip-free jointing of melamine-, paper-, HPL-laminated, foiled and veneered panels

Design

- asymmetrical design
- large opposing shear angle
- resharpening area 4 mm

Advantages

- optimized chip removal thanks to ChipMeister version
- less chips remain inside of the machine
- no malfunctions due to chips
- reduction of suction power
- optimal glueing of edges
- excellent cutting quality even in the case of loose core
- suitable for laser edging

Notes

- sense of rotation according to DIN-EN 50144

Ø D	B	b	Ø d	Z	DKN	nmax		Ident-No. [L]	Ident-No. [R]
180	43	48	35	5+5	10x3,3	10000	asymmetrical	185065	185066
180	64,2	60	35	5+5	10x3,3	10000	asymmetrical	185067	185068
180	32,4	37	35	6+6	10x3,3	10000	asymmetrical	185131	185130
180	43	48	35	7+7	10x3,3	10000	asymmetrical	185047 s	185048 s
180	64,2	60	35	7+7	10x3,3	10000	asymmetrical	185049 s	185050 s
200	32,4	37	35	6+6	10x3,3	9000	asymmetrical	185133	185132
200	43	48	35	6+6	10x3,3	9000	asymmetrical	185069	185070
200	64,2	60	35	6+6	10x3,3	9000	asymmetrical	185051 s	185052 s
200	43	48	35	8+8	10x3,3	9000	asymmetrical	185053 s	185054 s
200	64,2	60	35	8+8	10x3,3	9000	asymmetrical	185055 s	185056 s
200	43	48	35	10+10	10x3,3	9000	asymmetrical	185057 s	185058 s
200	64,2	60	35	10+10	10x3,3	9000	asymmetrical	185059 s	185060 s
220	43	48	35	12+12	10x3,3	8500	asymmetrical	185061 s	185062 s
220	64,2	60	35	12+12	10x3,3	8500	asymmetrical	185063 s	185064 s
[mm]	[mm]	[mm]	[mm]		[mm]	[min-1]			

222120

DIAREX Jointing Cutters CM DP LowNoise

Product

Drawing

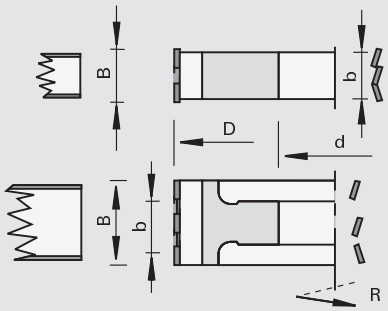

LOW

LEUCO DIAREX

polycrystalline diamond [DP]

MEC

Machine / Application

- edge banding machines
- for noise-reduced, chip-free jointing of melamine-, paper-, HPL-laminated, foiled and veneered panels

Design

- symmetrical and asymmetrical design
- large opposing shear angle
- uneven cutting edge configuration
- resharpening area 3 mm

Advantages

- optimized chip removal thanks to ChipMeister version
- less chips remain inside of the machine
- no malfunctions due to chips
- reduction of suction power
- optimal glueing of edges
- optimized as to noise level and chip flow
- excellent cutting quality even in the case of loose core
- suitable for laser-edge-technology

Notes

- sense of rotation according to DIN-EN 50144

Ø D	B	b	Ø d	Z	DKN	nmax			Ident-No. [L]	Ident-No. [R]
70	48,3	41	30	3+3	8x3,3	24000	HOLZ-HER	asymmetrical	184641 s	184642 s
70	64,2	41	30	3+3	8x3,3	24000	HOLZ-HER	asymmetrical	184643 s	184644 s
100	48,3	40	30	3+3	8x3,3	18000	Brandt, IMA, Biesse, SCM	asymmetrical	184637	184638
100	64,2	40.6	30	3+3	8x3,3	18000	Brandt, IMA, Biesse, SCM	asymmetrical	184639 s	184640 s
125	32,4	36.8	30	3+3	8x3,3	15000	Homag	symmetrical	184632	184632
125	43	40	30	3+3	8x3,3	15000	Homag	symmetrical	184633	184633
125	43	40.6	30	3+3	8x3,3	15000	Homag, IMA aggregate 08.378	asymmetrical	184955	184956
125	43	57	30	3+3	8x3,3	15000	IMA aggregate 08.379	asymmetrical	184981 s	184982 s
125	63	40	30	3+3	8x3,3	15000	Homag	symmetrical	184634	184634
125	63	40	30	3+3	8x3,3	15000	Homag	asymmetrical	184897	184898
125	64,2	40.6	30	3+3	8x3,3	15000	IMA aggregate 08.378	asymmetrical	184947	184948
125	64,2	57	30	3+3	8x3,3	15000	IMA aggregate 08.379	asymmetrical	184953	184954
[mm]	[mm]	[mm]	[mm]		[mm]	[min-1]				

mounted on Hydro-Bushing Ident-No. 184310

Ø D	B	Ø d	Z	nmax			Ident-No. [L]	Ident-No. [R]
125	43	70/30	3+3	15000	IMA aggregate 08.378 Hydro	asymmetrical	184969 s	184970 s
125	64,2	70/30	3+3	15000	IMA aggregate 08.378 Hydro	asymmetrical	184971 s	184972 s
125	43	70/30	4+4	15000	IMA aggregate 08.379 Hydro	asymmetrical	185119 s	185118 s
125	64,2	70/30	4+4	15000	IMA aggregate 08.379 Hydro	asymmetrical	185121 s	185120 s
125	43	70/30	5+5	15000	Homag Performance S2	symmetrical	185169	185170
125	63	70/30	5+5	15000	Homag Performance S2	symmetrical	185171	185172
150	43	70/30	5+5	12000	Homag Power S2 Hydro	symmetrical	185165	185166
150	63	70/30	5+5	12000	Homag Power S2 Hydro	symmetrical	185167	185168
[mm]	[mm]	[mm]		[min-1]				

mounted on tool holder HSK 63 F, modified Ident-No. 184787

Ø D	B	Ø d	Z	nmax			Ident-No. [L]	Ident-No. [R]
150	43	HSK 63F	5+5	12000	Homag Power S2 HSK 63F	symmetrical	185173 s	185174 s
150	63	HSK 63F	5+5	12000	Homag Power S2 HSK 63F	symmetrical	185175 s	185176 s
[mm]	[mm]	[mm]		[min-1]				

222226

DIAMAX p-System Jointing Cutters CM DP

Product

Drawing

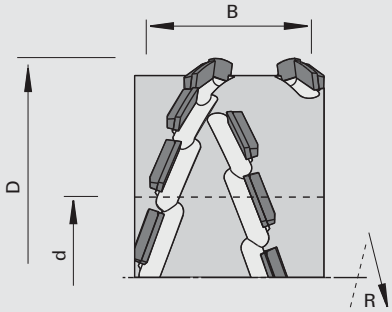

polycrystalline diamond [DP]

MAN

Machine / Application

- table shaper
- for chip-free high-performance jointing and dividing of solid woods (free of knots) along and accross the grain
- for jointing and dividing of melamine-, paper-, HPL-laminated, foiled and veneered panels and lacquered surfaces
- Finish-quality in the case of fiber materials such as fabric-laminated panels, linoleum with jute fibers, cork etc.

Design

- symmetrical design
- non-convex design
- extremely scoring cut
- resharpening area 1.5 mm

Advantages

- maximum cutting quality and edge lives
- large depth of cut possible

Notes

- application against feed
- recommended feed rate per tooth: wood-based panels 0.8 mm, solid wood 0.4 mm
- crowned design on request
- sense of rotation according to DIN-EN 50144

Ø D	B	b	Ø d	Z	Shear∢	nmin-nmax		Ident-No. [L]	Ident-No. [R]
125	28,2	35.2	30	2+2	70	6100-10500	symmetrical	184332	184332
125	47,8	54.8	30	2+2	70	6100-10500	symmetrical	184333	184333
125	28,2	35.2	30	3+3	70	6100-10500	symmetrical	184329	184329 s
125	47,8	54.8	30	3+3	70	6100-10500	symmetrical	184330	184330 s
[mm]	[mm]	[mm]	[mm]		[°]	[min-1]			

222324

p-System High-Performance Jointing Cutters CM DP - one part version

Product

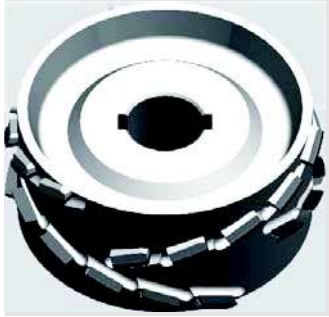

Drawing

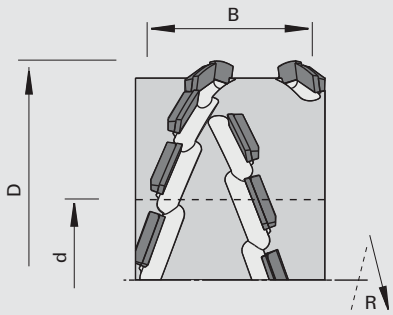

polycrystalline diamond [DP]

MEC

Machine / Application

- double end tenoners
- edge banding machines
- for chip-free high-performance jointing and dividing of solid woods (free of knots) along and accross the grain
- for jointing and dividing of melamine-, paper-, HPL-laminated, foiled and veneered panels and lacquered surfaces
- Finish-quality in the case of fiber materials such as fabric-laminated panels, linoleum with jute fibers, cork etc.

Design

- symmetrical and asymmetrical design
- extremely scoring cut
- resharpening area 4 mm

Advantages

- maximum cutting quality and edge lives
- large depth of cut possible
- perfectly suitable for laser-edge-technology

Notes

- application against feed
- recommended feed rate per tooth: wood-based panels 0.8 mm, solid wood 0.4 mm
- crowned design on request
- sense of rotation according to DIN-EN 50144

Ø D	B	b	Ø d	Z	DKN	nmax			Ident-No. [L]	Ident-No. [R]
70	47,8	41	30	3+3	8x3,3	27000		asymmetrical	184079 s	184078 s
100	42,9	40.6	30	3+3	8x3,3	19000		asymmetrical	184074 s	184073 s
100	62,5	40.6	30	3+3	8x3,3	19000		asymmetrical	184089 s	184075 s
100	62,5	40.6	30	3+3	8x3,3	19000		asymmetrical	184077 s	184076 s
125	42,9	40.6	30	3+3	8x3,3	15000	Homag, IMA aggregate 08.378	asymmetrical	184961 s	184962 s
125	42,9	57	30	3+3	8x3,3	15000	IMA aggregate 08.379	asymmetrical	184987 s	184988 s
125	47,8	40	30	3+3	8x3,3	15000		symmetrical	184071	184071
125	61,5	40	30	3+3	8x3,3	15000		quasi sym-metrical	184328 s	184327 s
125	62,5	40.6	30	3+3	8x3,3	15000	IMA aggregate 08.378	asymmetrical	184963 s	184964 s
125	62,5	57	30	3+3	8x3,3	15000	IMA aggregate 08.379	asymmetrical	184989 s	184990 s
180	42,9	58.5	35	5+5	10x3,3	10000		quasi sym-metrical	184085 s	184063 s
180	62,5	58.5	35	5+5	10x3,3	10000		quasi sym-metrical	184086 s	184064 s
180	62,5	58.5	35	8+8	10x3,3	10000		quasi sym-metrical	184087 s	184065 s
200	42,9	50	35	5+5	10x3,3	9000		quasi sym-metrical	184088 s	184066 s
[mm]	[mm]	[mm]	[mm]		[mm]	[min-1]				

mounted on Hydro-Bushing Ident-No. 184310

Ø D	B	Ø d	Z	nmax			Ident-No. [L]	Ident-No. [R]
125	42,9	70/30	3+3	15000	IMA aggregate 08.378 Hydro	asymmetrical	184977 s	184978 s
125	42,9	70/30	4+4	15000	IMA aggregate 08.379 Hydro	asymmetrical	185127 s	185126 s
125	62,5	70/30	3+3	15000	IMA aggregate 08.378 Hydro	asymmetrical	184979 s	184980 s
125	62,5	70/30	4+4	15000	IMA aggregate 08.379 Hydro	asymmetrical	185129 s	185128 s
[mm]	[mm]	[mm]		[min-1]				

mounted on Hydro-Bushing Ident-No. 172678

Ø D	B	Ø d	Z	nmax		Ident-No. [L]	Ident-No. [R]
200	42,9	60/40	8+8	9000	asymmetrical	184068 s	184067 s
200	62,5	60/40	8+8	9000	asymmetrical	184070 s	184069 s
[mm]	[mm]	[mm]		[min-1]			

223020

Jointing Cutters DP

Product

Drawing

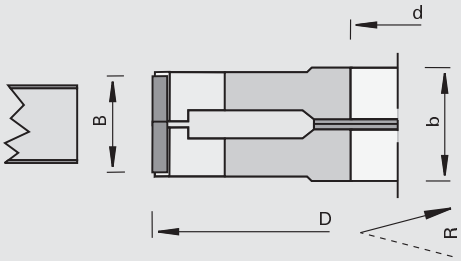

LEUCO DIA

polycrystalline diamond [DP]

MEC

Machine / Application

- double end tenoners
- edge banding machines
- for chip-free jointing of melamine-, paper-, HPL-laminated, foiled and veneered panels

Design

- resharpenable area 3.5 mm
- opposing shear angle
- Ø 150 mm: n max = 12,000 min-1 / Ø 200 mm: n max = 9,000 min-1
- two-part version with spacer rings

Advantages

- tool allows for 3 adjustments = four single edge lives between sharpenings

Notes

- the specified feed rates are based on Ø = 150 mm: n = 9,000 min-1 / Ø = 200 mm: n = 6,000 min-1
- sense of rotation according to DIN-EN 50144

Ø D	B	b	Ø d	Z	DKN	Recommended feed	Ident-No.
150	22 - 28	32	30	3+3	8x3	23	178798 s
200	22 - 28	32	35	4+4	10x4	20	178801 s
200	22 - 28	32	35	5+5	10x4	25	179073 s
200	22 - 28	32	35	6+6	10x4	30	178804 #
[mm]	[mm]	[mm]	[mm]		[mm]	[m/min]	

223020

Jointing Cutter CM DP - two-part

Product

Drawing

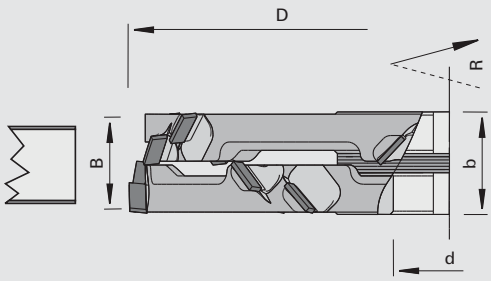

polycrystalline diamond [DP]

MEC

Machine / Application

- double end tenoners
- edge banding machines
- for chip-free jointing of melamine-, paper-, HPL-laminated, foiled and veneered panels

Design

- symmetrical design
- two-part adjustable via spacers
- large opposing shear angle
- resharpening area 4 mm

Advantages

- tool allows for 3 adjustments = four single edge lives between sharpenings
- optimized chip removal thanks to ChipMeister version
- less chips remain inside of the machine
- no malfunctions due to chips
- reduction of suction power
- optimal glueing of edges
- excellent cutting quality even in the case of loose core
- suitable for laser edging

Notes

- sense of rotation according to DIN-EN 50144

Ø D	B	b	Ø d	Z	DKN	nmax		Ident-No. [L]	Ident-No. [R]
200	22 - 28	32	35	6+6	10x3,3	9000	symmetrical	185079	185079
[mm]	[mm]	[mm]	[mm]		[mm]	[min-1]			

223020

Jointing Cutters DP progressively adjustable

Product

Drawing

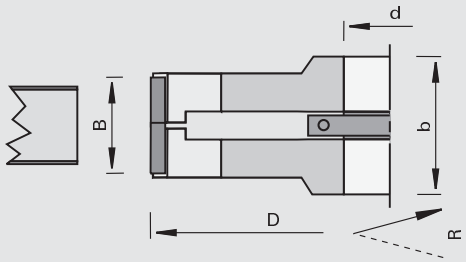

LEUCO DIA

polycrystalline diamond [DP]

MEC

Machine / Application

- double end tenoners with precision spindle (hexagon adapter)
- for chip-free jointing of melamine-, paper-, HPL-laminated, foiled and veneered panels

Design

- resharpenable area 4.0 mm
- Ø 200 mm: n max = 9,000 min-1 / Ø 240 mm: n max = 6,000 min-1

Advantages

- clear increase of edge life thanks to concentric accuracy achieved by hydro clamping
- adjusting several times allows the addition of edge lives
- reduction of machine down-times thanks to of user-friendly adjustment device

Notes

- sense of rotation according to DIN-EN 50144

Ø D	B	b	Ø d	Z	Recommended feed	Ident-No. [L]	Ident-No. [R]
200	22 - 28	101	40	2 x (4+4)	25	180099 s	180098 s
200	22 - 28	101	40	2 x (6+6)	35	180101 s	180100 s
200	22 - 28	101	40	2 x (8+8)	45	180103 s	180102 s
200	22 - 28	101	40	2 x (10+10)	55	180105 s	180104 s
240	22 - 28	101	40	2 x (12+12)	65	180107 s	180106 s
240	22 - 28	101	40	2 x (14+14)	80	180180 s	180179 s
[mm]	[mm]	[mm]	[mm]		[m/min]		

120265

Jointing and Rabbeting Cutterheads HW with shear angle

Product

Drawing

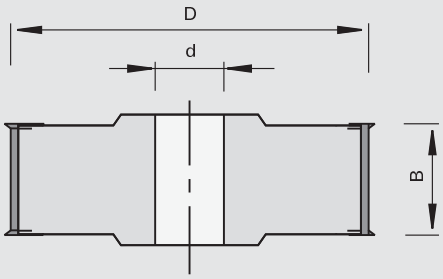

tungsten carbide [HW]

MAN

Machine / Application

- table shapers
- for chip-free jointing and rabbeting in solid woods and wood-based panels

Design

- with face shear angles from above and below
- cutting material: HW HL Board 05
- body made from high-quality light-metal alloy

Advantages

- optimum cutting quality

Notes

- application against feed

Ø D	B	Ø d	Z	nmin-nmax	Ident-No.
140	60	30	4+4	5400-9400	179180
[mm]	[mm]	[mm]		[min-1]	

Turnover Knives	B	H	S	Class-No.	Ident-No.
Spurs	14	14	2	150559	003079
Turnover Knives	50	12	1.5	150515	003085
	[mm]	[mm]	[mm]		

Spare parts		Dimension	Class-No.	Ident-No.
Clamping Bars		6x11x48	925300	180346
Clamping Parts		12x8,5/M8L	925100	180357
Clamping Setscrews		M8x26 SW4	995161	180340
Countersink Screws	for spur	M5x10,8 T15	995125	180840
Screwdrivers		SW4x100	985730	166091
Screwdrivers		T15x80	985730	171188
		[mm]		

120255

Jointing and Rabbeting Cutterheads HW without shear angle

Product

Drawing

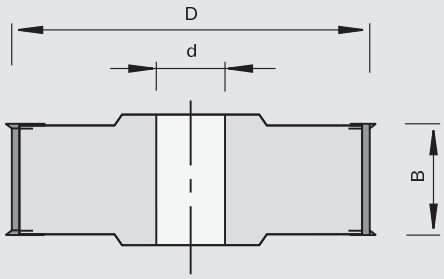

LEUCO DUR

tungsten carbide [HW]

MAN

Machine / Application

- table shapers
- for jointing and rabbeting in solid woods and wood-based panels

Design

- cutting edges parallel to cutter axis
- cutting material: HW HL Board 05

Advantages

Notes

- application against feed

Ø D	B	Ø d	Z	DKN	nmin-nmax	Ident-No.
85	50	30	2+4		9000-15500	167038
100	30	30	2+4		7700-13300	167039 s
100	50	30	2+4		7700-13300	167040 s
125	30	30	2+4		6100-10500	167041
125	50	30	2+4		6100-10500	167043
125	50	35	2+4	10x4	6100-10500	167044 &
125	50	30	4+4		6100-10500	167046
125	50	35	4+4	10x4	6100-10500	167047 &
125	50	40	4+4	12x5	6100-10500	167048 &
[mm]	[mm]	[mm]		[mm]	[min-1]	

Turnover Knives	B	H	S	Class-No.	Ident-No.
Spurs	14	14	2	150559	003079
Turnover Knives	30	12	1.5	150515	003083
Turnover Knives	50	12	1.5	150515	003085
	[mm]	[mm]	[mm]		

Spare parts	Dimension	For Ident-No.	Class-No.	Ident-No.
Clamping Bars	B=30	167039, 167041	925300	164185
Clamping Bars	B=48	167038, 167040, 167043, 167044, 167046, 167047, 167048	925300	166984
Set Screws	M6x12 DIN EN ISO 4028	167038, 167040	995161	180214
Set Screws	M6x16 SW3	167039, 167041, 167043, 167044, 167046, 167047, 167048	995161	001617
Countersink Screws	M5x10,8 T15	For all	995125	180840
Screwdrivers	SW3x100	For all	985730	166090
Screwdrivers	T15x100	For all	985730	180470
Adjusting Gauges	1,0	For all	985200	011103
	[mm]			

222225

DIAMAX Jointing / Rabbeting Cutters DP

Product

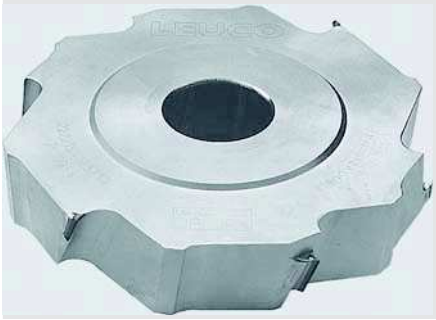

Drawing

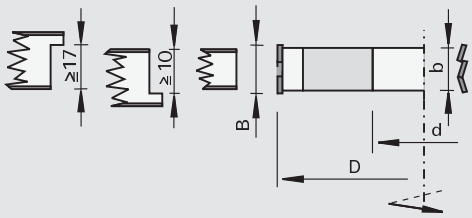

LEUCO DIAMAX

polycrystalline diamond [DP]

MAN

Machine / Application

- table shapers
- machines Homag
- for chip-free jointing and rabbeting of melamine-, paper-, HPL-laminated and veneered panels

Design

- opposing shear angle
- resharpenable area 1.5 mm

Advantages

Notes

- application against feed
- sense of rotation according to DIN-EN 50144

Ø D	B	Ø d	Z	DKN	nmin-nmax	Ident-No.
125	25	30	2+2	8x3	6100-10500	173710
125	25	50	2+2		6100-10500	173786 s
125	43	30	2+2	8x3	6100-10500	182704 s
[mm]	[mm]	[mm]		[mm]	[min-1]	

120200

Planing and Rabbeting Cutterheads HW

Product

Drawing

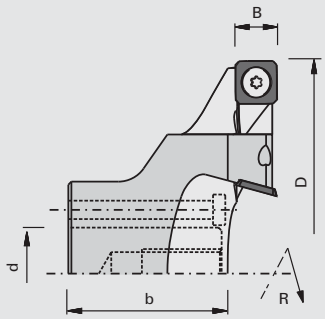

LEUCO DUR

tungsten carbide [HW]

MEC

Machine / Application

- CNC routers
- for planing, rabbeting and panel raising in wood-based panels

Design

- cutting material: HL Solid 25

Advantages

- high milling performance when dressing the workbench boards, e.g. with Nesting technology
- smooth surface thanks to special cutting edge geometry

Notes

- sense of rotation according to DIN-EN 50144

Ø D	B	b	Ø d	DKN	Z	NL	nmax	Ident-No.
150	14	51.9	30	8x3,3	4	6/7/48	10100	182439 s
[mm]	[mm]	[mm]	[mm]	[mm]			[min-1]	

Turnover Knives	B	H	S	Class-No.	Ident-No.
	14	14	2	150558	180932
	[mm]	[mm]	[mm]		

Spare parts	Dimension	Class-No.	Ident-No.
Countersunk Flat Headed Screws	M5x6 T20	995125	176199
Screwdrivers	T20x100	985730	166092
	[mm]		

128200

Planing and Rabbeting Cutterheads HW - mounted on arbor

Product

Drawing

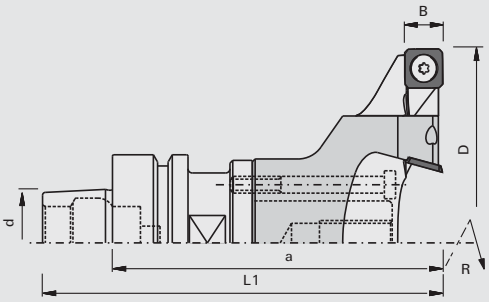

LEUCO DUR

tungsten carbide [HW]

MEC

Machine / Application
- CNC routers
- for planing and rabbeting in wood-based panels

Design
- mounted on tool holder HSK 63 F

Advantages
- high milling performance when dressing the workbench boards, e.g. with Nesting-technology
- smooth surface thanks to special cutting edge geometry

Notes
- sense of rotation according to DIN-EN 50144

Ø D	B	Ø d	L1	a	Z	nmax	Ident-No.
150	14	HSK 63F	138	113	4	10100	182440 s
[mm]	[mm]	[mm]	[mm]	[mm]		[min-1]	

Spare parts	Class-No.	Ident-No.
Mounting Arbors with HSK shank	933069	183748

220020

Planing and Rabbeting Cutters DP

Product

Drawing

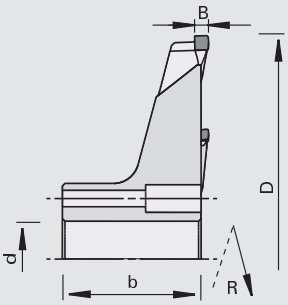

LEUCO DIA

polycrystalline diamond [DP]

MEC

Machine / Application
- CNC routers
- for planing, rabbeting and panel raising in wood-based panels

Design
- resharpening area 3.0 mm

Advantages
- high milling performance when dressing the workbench boards, e.g. with Nesting technology
- smooth surface thanks to special cutting edge geometry

Notes
- sense of rotation according to DIN-EN 50144

Ø D	B	b	Ø d	Z	nmax	Ident-No.
150	5,6	55	30	8	12700	182662 s
180	5,6	58	30	8	10300	182426 s
[mm]	[mm]	[mm]	[mm]		[min-1]	

229020

Planing and Rabbeting Cutterheads DP - mounted on arbor

Product

Drawing

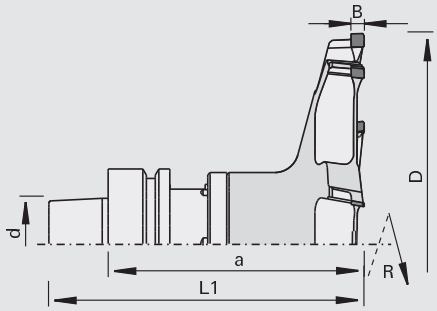

LEUCO DIA

polycrystalline diamond [DP]

MEC

Machine / Application

- CNC routers
- for planing and rabbeting in wood-based panels

Design

- mounted on tool holder HSK 63 F
- resharpenable area 3.0 mm

Advantages

- high milling performance when dressing the workbench boards, e.g. with Nesting-technology
- smooth surface thanks to special cutting edge geometry

Notes

- sense of rotation according to DIN-EN 50144

Ø D	B	Ø d	L1	a	Z	nmax	Ident-No.
150	5,6	HSK 63F	128	103	8	12700	182661 s
180	5,6	HSK 63F	128	103	8	10300	182425 s
[mm]	[mm]	[mm]	[mm]	[mm]		[min-1]	

122200

Corner Notching Cutter HW - Homag

Product

Drawing

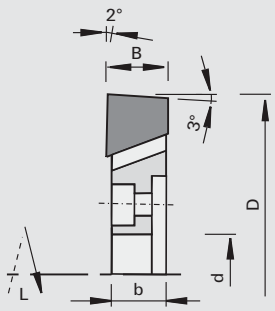

LEUCO DUR

tungsten carbide [HW]

MAN

Machine / Application

- CNC machining centers Homag / aggregate 7547
- for sharp-edged cutting out of inside corners

Design

- n max = 24.000 min-1

Advantages

Notes

- sense of rotation according to DIN-EN 50144

Ø D	B	b	Ø d	Z	Ident-No.
75	15	13	16	4	182457
[mm]	[mm]	[mm]	[mm]		

120305

Pivoting Cutterheads HW

Product

Drawing

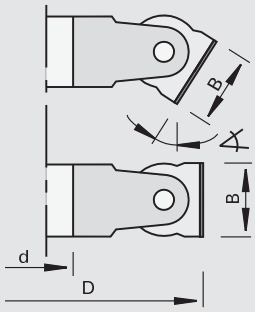

tungsten carbide [HW]

MAN

Machine / Application

- table shapers
- for chamfering, jointing and rabbeting with adjustable chamfer angle in solid woods and in veneered and plastic-coated panels

Design

- cutting edges parallel to cutter axis
- cutting material: HW HL Board 05

Advantages

Notes

- application against feed
- rabbeting with additional spur
- pivot range up to 60 degree
- Ø 120 mm chamfer angle adjustable from 5 degree to 5 degree
- Ø 150 mm chamfer angle adjustable from 1 degree to 1 degree

Ø D	B	Ø d	Z	nmin-nmax	Ident-No. top	
120	40	30	2	6400-11000	179184	s
150	50	30	2	5200-9000	179185	
150	50	40	2	5200-9000	180903	
160	50	50	2	4800-8000	180904	
[mm]	[mm]	[mm]		[min-1]		

Pre-scoring discs	Ø D	B	Ø d	Z	Class-No.	Ident-No.	
	150	8	30	2	120255	179182	s
	[mm]	[mm]	[mm]				

Turnover Knives	B	H	S	Class-No.	Ident-No.
Spurs	14	14	2	150559	003079
Turnover Knives	40	12	1.5	150515	164078
Turnover Knives	50	12	1.5	150515	003085
	[mm]	[mm]	[mm]		

Spare parts	Dimension	Class-No.	Ident-No.	
Clamping Bars	B=40	925300	50930125	s
Clamping Bars	B=50	925300	50930124	
Screws for spurs	M5x6,8 T15	995125	180839	
Set Screws	M6x16 SW3	995161	001617	
Screwdrivers	SW3x100	985730	166090	
Cranked Wrench Keys	SW6 DIN ISO 2936	985730	009675	
	[mm]			

120281

Jointing / Rabbeting Cutterheads HW

Product

Drawing

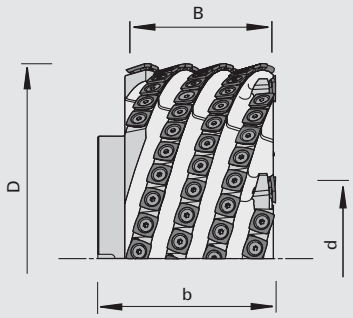

LEUCO P>system

tungsten carbide [HW]

MEC

Machine / Application

- machine
- EWD FR15, FR16
- Linck VPF340
- for milling of corners / profiling

Design

- one part and segmented
- turnover knives can be used on all four sides
- extremely scoring cut
- cutting material: HW HL Solid 20

Advantages

- no chippings due to knots
- considerable improvement of surface quality compared to the existing chipping knives
- small chips suitable for pellet production
- extremely long edge lives (up to 8 million running meters)

Notes

- chips are not suitable for paper industry
- feed rate per tooth fz = 2-8 mm

Ø D	B	b	Ø d	Z	Shear◁		
360	139,5	164	110	8+8	70	vertical axis top	EWD
360	139,5	164	110	8+8	70	vertical axis bottom	EWD
402	139	164	110	8+8	70	vertical axis top	EWD
402	139	164	110	8+8	70	vertical axis bottom	EWD
402	121	139	120/200	8+8	70	vertical axis top	Linck
402	121	139	120/200	8+8	70	vertical axis bottom	Linck
360	64	164	60	4+4	70	horizontal axis right	EWD
360	64	164	60	4+4	70	horizontal axis left	EWD
360	64	164	60	5+5	70	horizontal axis right	EWD
360	64	164	60	5+5	70	horizontal axis left	EWD
360	64	164	60	8+8	70	horizontal axis right	EWD
360	64	164	60	8+8	70	horizontal axis left	EWD
360	89,2	164	60	6+6	70	horizontal axis right	EWD
360	89,2	164	60	6+6	70	horizontal axis left	EWD
[mm]	[mm]	[mm]	[mm]		[°]		

Turnover Knives	B	H	S	Class-No.	Ident-No.
for Ø D=360 mm	21	21	5.5	151517	184786
for Ø D=402 mm	21	21	5.5	151517	185469
	[mm]	[mm]	[mm]		

Spare parts	Dimension	Class-No.	Ident-No.
Countersunk Flat Headed Screws	M7x16,8 T30 10.9	995125	50930305
Head Cap Screws	M14x60 ISO 4762 12.9	995111	185008
Head Cap Screws	M14x80 DIN 4762 12.9	995111	185181
Conical Screws	M6x10 D7.8x20GRD 10.9	995191	184891
	[mm]		

120607

SuperProfiler HW (inside profile) - MAN

Product

Drawing

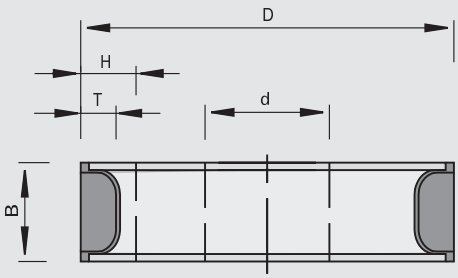

SUPER PROFILER

tungsten carbide [HW]

MAN

Machine / Application

- table shapers
- for planing and profiling of solid woods and wood-based panels

Design

- cutting edges parallel to cutter axis
- n = 6.200 - 10,700 min-1
- cutting material: HW HL Board 06 for hard woods and wood-based panels
- cutting material: HW HL Solid 60 for soft woods

Advantages

- cutterhead for mounting of several profile knives

Notes

- application against feed
- profile knife can be profiled per customer specifications
- included in delivery: cutter-head with clamping elements, without profile knives, support plates and deflectors

Ø D	B	Ø d	Ø dmax	Tmax	Z	Drawing	Ident-No. unprofiled
125	40	30	35	13	2	SP 1	167263
125	60	30	35	15	2	SP 2	167264
[mm]	[mm]	[mm]	[mm]	[mm]		[Foil]	

Blanks	B	H	LEUCODUR	Drawing/Foil	Class-No.	Ident-No.
SP blanks	40,6	28.2	HL Board 06	SP 1	152526	179112
SP blanks	40,6	28.2	HL Solid 60	SP 1	152529	177367
SP blanks	60,8	30.2	HL Board 06	SP 2	152526	179113
SP blanks	60,8	30.2	HL Solid 60	SP 2	152529	177368
support plates	40	28		SP 1	925402	178007
support plates	60	30		SP 2	925402	178008
deflector plates	40	28		SP 1	925407	167267
deflector plates	60	30		SP 2	925407	167268
	[mm]	[mm]				

Spare parts	Dimension	For Ident-No.	Class-No.	Ident-No.
Clamping Bars	36x12x8	167263	925300	166737
Clamping Bars	58x12x8	167264	925300	166738
Special Set Screws	M8x24		995191	167269
Screwdrivers	SW4x100		985730	166091
	[mm]			

120607

SuperProfiler HW (outside profile) - MAN

Product

Drawing

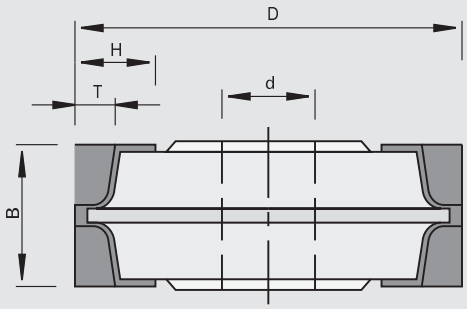

tungsten carbide [HW]

MAN

Machine / Application

- table shapers
- for profiling of solid woods and wood-based panels

Design

- cutting edges parallel to cutter axis
- n = 6.200 - 10,700 min-1
- cutting material: HW HL Board 06 for hard woods and wood-based panels
- cutting material: HW HL Solid 60 for soft woods

Advantages

- cutterhead for mounting of several profile knives

Notes

- application against feed
- profile knife can be profiled per customer specifications
- included in delivery: cutter-head with clamping elements, without profile knives, support plates and deflectors

Ø D	B	Ø d	Ø dmax	Tmax	Z	Drawing	Ident-No. unprofiled	
125	40	30	35	13	2	SP 3	167897	s
[mm]	[mm]	[mm]	[mm]	[mm]		[Foil]		

Blanks	B	H	LEUCODUR	Drawing/Foil	Class-No.	Ident-No.
SP blanks	40,6	28.2	HL Board 06	SP 3	152526	179112
SP blanks	40,6	28.2	HL Solid 60	SP 3	152529	177367
support plates	40	28		SP 3	925402	178011
deflector plates	40	28		SP 3	925407	167898
	[mm]	[mm]				

Spare parts	Dimension	Class-No.	Ident-No.
Clamping Bars	36x12x8	925300	166737
Special Set Screws	M8x24	995191	167269
Screwdrivers	SW4x100	985730	166091
	[mm]		

120602

SuperProfiler HW (inside profile) - MEC

Product

Drawing

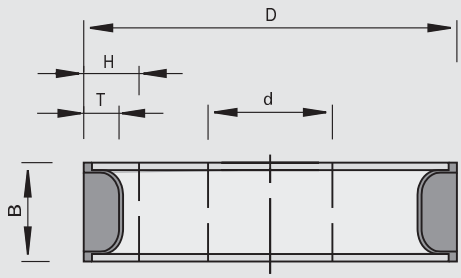

tungsten carbide [HW]

MEC

Machine / Application

- double end tenoners
- molders
- profiling unit and length processing unit IMA
- for profiling of solid woods and wood-based panels

Design

- cutting edges parallel to cutter axis
- cutting material: HW HL Board 06 for hard woods and wood-based panels
- cutting material: HW HL Solid 60 for soft woods

Advantages

- cutterhead for mounting of several profile knives

Notes

- profile knife can be profiled per customer specifications
- included in delivery: cutter-head with clamping elements, without profile knives and support plates

Ø D	B	Ø d	Ø dmax	Tmax	Z	DKN	nmax	Drawing	Ident-No. unprofiled	
125	40	30	35	13	2	8x3	12000	SP 7	167439	s
125	40	31,75	35	13	2		12000	SP 7	167440	s
125	60	31,75	35	15	2		12000	SP 5	167442	s
150	40	30	50	13	3	8x3	10000	SP 7	166971	
150	40	31,75	50	13	3		10000	SP 7	176184	s
150	40	35	50	13	3	10x4	10000	SP 7	166972	
150	40	40	50	13	3	12x5	10000	SP 7	166973	
150	60	30	50	15	3	8x3	10000	SP 5	166975	
150	60	40	50	15	3	12x5	10000	SP 5	166977	
150	60	31,75	35	25	3		7200	SP 4	176230	
165	40	30	50	20	3	8x3	8500	SP 33	176088	
180	40	35	50	13	3	10x4	8000	SP 7	166720	s
180	40	40	50	13	3	12x5	8000	SP 7	166721	s
180	60	35	50	15	3	10x4	8000	SP 5	166723	s
180	60	40	50	15	3	12x5	8000	SP 5	166724	s
180	60	31,75	50	25	3		6000	SP 4	168127	s
180	60	50	50	25	3		6000	SP 4	168131	s
180	80	40	50	25	3	12x5	6000	SP 6	167993	s
[mm]	[mm]	[mm]	[mm]	[mm]		[mm]	[min-1]	[Foil]		

Blanks	B	H	LEUCODUR	Drawing/Foil	Class-No.	Ident-No.
SP blanks	40,6	28.2	HL Board 06	SP 7	152526	179112
SP blanks	40,6	28.2	HL Solid 60	SP 7	152529	177367
SP blanks	60,8	30.2	HL Board 06	SP 5	152526	179113
SP blanks	60,8	30.2	HL Solid 60	SP 5	152529	177368
SP blanks	40,6	40.6	HL Board 06	SP 33	152526	179115
SP blanks	40,6	40.6	HL Solid 60	SP 33	152529	178844
SP blanks	60,6	45.6	HL Board 06	SP 4	152526	179999
SP blanks	60,6	45.6	HL Solid 60	SP 4	152529	178845
SP blanks	80,6	45.6	HL Board 06	SP 6	152526	180016
SP blanks	80,6	45.6	HL Solid 60	SP 6	152529	180017
support plates	40	28		SP 7	925402	178007
support plates	40	40		SP 33	925402	178006
support plates	60	30		SP 5	925402	178008
support plates	60	45		SP 4	925402	178009
support plates	80	45		SP 6	925402	178013
	[mm]	[mm]				

Spare parts	Dimension	For drawing/foil	Class-No.	Ident-No.
Clamping Bars	36x12x8	SP 7	925300	166737
Clamping Bars	36x14x8	SP 33	925300	176096
Clamping Bars	56x12x8	SP 4	925300	167055
Clamping Bars	58x12x8	SP 5	925300	166738
Clamping Bars	76x15x8	SP 6	925300	167989
Set Screws	M8x20 DIN EN ISO 4028		995161	001625
Screwdrivers	SW4x100		985730	166091
	[mm]			

120622

SuperProfiler HW (outside profile) - MEC

Product

Drawing

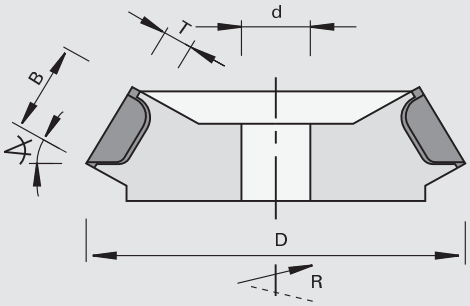

SUPER PROFILER

tungsten carbide [HW]

MEC

Machine / Application

- double end tenoners
- molders
- for profiling of solid woods and wood-based panels

Design

- cutting edges parallel to cutter axis
- cutting material: HW HL Board 06 for hard woods and wood-based panels
- cutting material: HW HL Solid 60 for soft woods

Advantages

- cutterhead for mounting of several profile knives

Notes

- profile knife can be profiled per customer specifications
- included in delivery: cutter-head with clamping elements, without profile knives and support plates
- sense of rotation according to DIN-EN 50144

Ø D	B	Ø d	Ø dmax	Tmax	Z	DKN	Crank∢	nmax	Drawing	Ident-No. [L] unprofiled	Ident-No. [R] unprofiled
165	40	30	40	13	3	8x3	30	9000	SP 13	167967 s	167968 s
[mm]	[mm]	[mm]	[mm]	[mm]		[mm]	[°]	[min-1]	[Foil]		

Blanks	B	H	LEUCODUR	Drawing/Foil	Class-No.	Ident-No.
SP blanks	40,6	28.2	HL Board 06	SP 12 / 13	152526	179112
SP blanks	40,6	28.2	HL Solid 60	SP 12 / 13	152529	177367
support plates	40	28		SP 12 / 13	925402	178007
	[mm]	[mm]				

Spare parts	Dimension		Class-No.	Ident-No.
Clamping Bars	36x12x8	left	925300	166736
Clamping Bars	36x12x8	right	925300	166737
Set Screws	M8x20 DIN EN ISO 4028		995161	001625
Screwdrivers	SW4x100		985730	166091
	[mm]			

120603

EcoPro Cutterheads HW (straight) - MAN

Product

Drawing

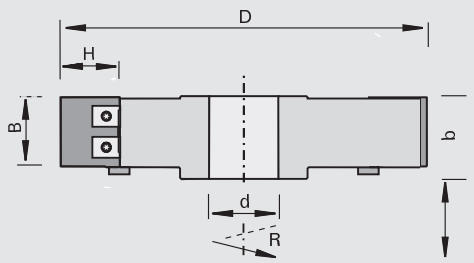

tungsten carbide [HW]

MAN

Machine / Application

- machining centers
- double end tenoners
- molders
- table shapers
- for profiling of solid woods and wood-based panels

Design

- special aluminum cutterhead body
- cutting edges parallel to cutter axis
- cutting material: HW HL Board 06 for hard woods and wood-based panels
- cutting material: HW HL Solid 60 for soft woods

Advantages

- cutterhead body and knives will be profiled according to customer specifications

Notes

- profile knives can be profiled according to customer specifications
- cutterhead body can be used only for one profile
- sense of rotation according to DIN-EN 50144

Ø D	B	H	b	Ø d	Ø dmax	Z	nmin-nmax	EP-No.	Drawing	Ident-No. unprofiled
125	30	30	36	30	30	3	7700-10480	50	EP 382	179050 s
125	40	30	46	30	30	3	7700-9480	51	EP 384	179051 s
125	50	33	56	30	30	3	7700-8420	52	EP 386	179052 s
150	30	30	36	30	50	3	6200-9620	53	EP 382	179053 s
150	40	30	46	30	50	3	6200-8420	54	EP 384	179054 s
150	50	33	56	30	50	3	6200-7300	55	EP 386	179055 s
180	30	30	36	30	50	4	4800-8600	56	EP 382	179056 s
180	40	30	46	30	50	4	4800-7520	57	EP 384	179057 s
180	50	33	56	30	50	4	5200-6500	58	EP 386	179058 s
[mm]	[mm]	[mm]	[mm]	[mm]	[mm]		[min-1]		[Foil]	

Blanks for Ident-No.	B	H	LEUCODUR	Drawing/Foil	Class-No.	Ident-No. [L]	Ident-No. [R]
179050, 179053, 179056, 179087, 179090, 179093, 179094	30,2	30.4	HL Board 06	EP 382	152586		178528
179050, 179053, 179056, 179087, 179090, 179093, 179094	30,2	30.4	HL Solid 60	EP 382	152589		179528
179051, 179054, 179057, 179088, 179091, 179095, 179096	40,1	30.4	HL Board 06	EP 384	152586		178534
179051, 179054, 179057, 179088, 179091, 179095, 179096	40,1	30.4	HL Solid 60	EP 384	152589		179534
179052, 179055, 179058, 179089, 179092, 179097, 179098	49,9	33	HL Board 06	EP 386	152586		178540
179052, 179055, 179058, 179089, 179092, 179097, 179098	49,9	33	HL Solid 60	EP 386	152589		179540
179050, 179053, 179056, 179087, 179090, 179093, 179094	30,2	30.4	HL Board 06 Topline	EP 382	152786	179585 &	179586 &
179050, 179053, 179056, 179087, 179090, 179093, 179094	30,2	30.4	HL Solid 60 Topline	EP 382	152789	179659 &	179660 &
179051, 179054, 179057, 179088, 179091, 179095, 179096	40,1	30.4	HL Board 06 Topline	EP 384	152786	179597 &	179598 &
	[mm]	[mm]					

Blanks for Ident-No.	B	H	LEUCODUR	Drawing/Foil	Class-No.	Ident-No. [L]	Ident-No. [R]
179051, 179054, 179057, 179088, 179091, 179095, 179096	40,1	30.4	HL Solid 60 Topline	EP 384	152789	179671 &	179672 &
179052, 179055, 179058, 179089, 179092, 179097, 179098	49,9	33	HL Board 06 Topline	EP 386	152786	179609 &	179610 &
179052, 179055, 179058, 179089, 179092, 179097, 179098	49,9	33	HL Solid 60 Topline	EP 386	152789	179683 &	179684 &
	[mm]	[mm]					

Spare parts	Dimension	Class-No.	Ident-No.
Screws	M4,5x4,6x9 T15	995195	178239
Screwdrivers	T15x80	985730	171188
	[mm]		

120613

EcoPro Cutterheads HW (cranked) - MAN

Product

Drawing

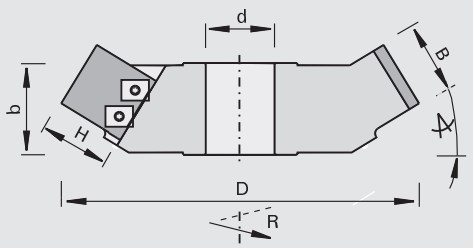

LEUCO DUR

tungsten carbide [HW]

MAN

Machine / Application
- machining centers
- double end tenoners
- molders
- table shapers
- for profiling of solid woods and wood-based panels

Design
- with shear angle
- cutting material: HW HL Board 06 for hard woods and wood-based panels
- cutting material: HW HL Solid 60 for soft woods

Advantages
- cutterhead body and knives will be profiled according to customer specifications

Notes
- profile knives can be profiled according to customer specifications
- cutterhead body can be used only for one profile
- sense of rotation according to DIN-EN 50144

Ø D	B	H	b	Ø d	Ø dmax	Z	Crank◁	nmin-nmax	EP-No.	Drawing	Ident-No. [L] unprofiled	Ident-No. [R] unprofiled
150	40	30	49	30	30	3	30	6300-7460	59	EP 390	179350 s	179059 s
180	40	30	50	30	50	4	30	5000-6580	61	EP 390	179355 s	179061 s
180	50	33	57	30	50	4	30	5000-5700	62	EP 392	179358 s	179062 s
165	40	30	46	30	30	3	45	5300-6920	63	EP 396	179360 s	179063 s
165	50	33	53	30	30	3	45	4600-6040	64	EP 398	179362 s	179064 s
195	40	30	46	30	50	4	45	5300-6160	65	EP 396	179365 s	179065 s
195	50	33	53	30	50	4	45	4600-5320	66	EP 398	179368 s	179066 s
[mm]	[mm]	[mm]	[mm]	[mm]	[mm]		[°]	[min-1]		[Foil]		

Blanks for Ident-No.	B	H	LEUCODUR	Drawing/Foil	Class-No.	Ident-No. [L]	Ident-No. [R]
179059, 179061, 179063, 179065, 179099, 179101, 179102, 179105, 179107, 179108, 179349, 179350, 179353, 179354, 179355, 179359, 179360, 179363, 179364, 179365	40,1	30.4	HL Board 06	EP 390, EP 396	152586		178534
	[mm]	[mm]					

Blanks for Ident-No.	B	H	LEUCODUR	Drawing/Foil	Class-No.	Ident-No. [L]	Ident-No. [R]
179059, 179061, 179063, 179065, 179099, 179101, 179102, 179105, 179107, 179108, 179349, 179350, 179353, 179354, 179355, 179359, 179360, 179363, 179364, 179365	40,1	30.4	HL Solid 60	EP 390, EP 396	152589		179534
179060, 179062, 179064, 179066, 179100, 179103, 179104, 179106, 179109, 179110, 179351, 179352, 179356, 179357, 179358, 179361, 179362, 179366, 179367, 179368	49,9	33	HL Board 06	EP 392 / 398	152586		178540
179060, 179062, 179064, 179066, 179100, 179103, 179104, 179106, 179109, 179110, 179351, 179352, 179356, 179357, 179358, 179361, 179362, 179366, 179367, 179368	49,9	33	HL Solid 60	EP 392 / 398	152589		179540
179059, 179061, 179063, 179065, 179099, 179101, 179102, 179105, 179107, 179108	40,1	30.4	HL Board 06 Topline	EP 390, EP 396	152786	179597 &	179598 &
179059, 179061, 179063, 179065, 179099, 179101, 179102, 179105, 179107, 179108	40,1	30.4	HL Solid 60 Topline	EP 390, EP 396	152789	179671 &	179672 &
179060, 179062, 179064, 179066, 179100, 179103, 179104, 179106, 179109, 179110	49,9	33	HL Board 06 Topline	EP 392 / 398	152786	179609 &	179610 &
179060, 179062, 179064, 179066, 179100, 179103, 179104, 179106, 179109, 179110	49,9	33	HL Solid 60 Topline	EP 392 / 398	152789	179683 &	179684 &
	[mm]	[mm]					

Spare parts	Dimension	Class-No.	Ident-No.
Screws	M4,5x4,6x9 T15	995195	178239
Screwdrivers	T15x80	985730	171188
	[mm]		

120604/120606

UltraProfiler-Cutterheads HW (straight) - MAN

Product

Drawing

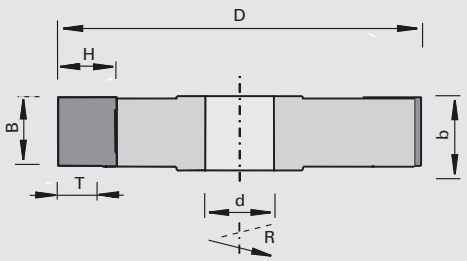

LEUCO ultra-profiler

tungsten carbide [HW]

MAN

Machine / Application

- machining centers
- double end tenoners
- molders
- table shapers
- for profiling of solid woods and wood-based panels

Design

- cutterhead body made from extremely tight aluminum alloy
- cutting edges parallel to cutter axis
- cutting material: HW HL Board 06 for solid woods and wood-based panels

Advantages

- large profile depths possible
- cutterhead body and knives will be profiled according to customer specifications

Notes

- knives in Topline Plus design (polished face, precise clearance angle)
- sense of rotation according to DIN-EN 50144

Ø D	B	H	Ø d	Ø dmax	T	Z	nmax
125	32	35	30	30	16	2	12000
125	32	35	30	30	16	3	12000
125	40	35	30	30	16	2	10500
125	40	35	30	30	16	3	10500
125	50	35	30	30	16	2	9500
125	50	35	30	30	16	3	9500
125	60	35	30	30	16	2	7200
125	60	35	30	30	16	3	7200
150	32	40	30	50	21	2	9000
150	32	40	30	50	21	3	9000
150	40	40	30	50	21	2	8000
150	40	40	30	50	21	3	8000
150	50	40	30	50	21	2	7500
150	50	40	30	50	21	3	7500
150	60	40	30	50	21	2	6500
150	60	40	30	50	21	3	6500
180	32	40	30	50	21	2	8500
180	32	40	30	50	21	3	8500
180	32	40	30	50	21	4	8500
180	40	40	30	50	21	2	7500
180	40	40	30	50	21	3	7500
180	40	40	30	50	21	4	7500
180	50	40	30	50	21	2	6500
180	50	40	30	50	21	3	6500
180	50	40	30	50	21	4	6500
180	60	40	30	50	21	2	6000
180	60	40	30	50	21	3	6000
180	60	40	30	50	21	4	6000
[mm]	[mm]	[mm]	[mm]	[mm]	[mm]		[min-1]

120614/120616

UltraProfiler-Cutterheads HW (cranked) - MAN

Product

Drawing

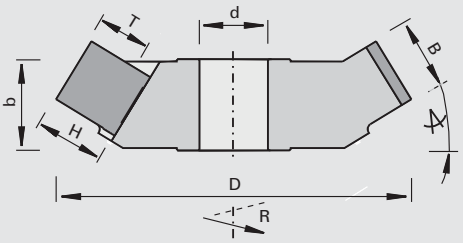

LEUCO ultra-profiler

tungsten carbide [HW]

MAN

Machine / Application

- machining centers
- double end tenoners
- molders
- table shapers
- for profiling of solid woods and wood-based panels

Design

- cutterhead body made from extremely tight aluminum alloy
- cutting edges parallel to cutter axis
- cutting material: HW HL Board 06 for solid woods and wood-based panels

Advantages

- large profile depths possible
- cutterhead body and knives will be profiled according to customer specifications

Notes

- knives in Topline Plus design (polished face, precise clearance angle)
- sense of rotation according to DIN-EN 50144

Ø D	B	H	Ø d	Ø dmax	T	Z	Crank∢	nmax
150	32	35	30	30	16	2	30	10500
150	32	35	30	30	16	3	30	10500
150	40	35	30	30	16	2	30	9500
150	40	35	30	30	16	3	30	9500
180	40	40	30	50	21	2	30	7500
180	40	40	30	50	21	3	30	7500
180	40	40	30	50	21	4	30	7500
180	50	40	30	50	21	2	30	6500
180	50	40	30	50	21	3	30	6500
180	50	40	30	50	21	4	30	6500
180	60	40	30	50	21	2	30	6000
180	60	40	30	50	21	3	30	6000
180	60	40	30	50	21	4	30	6000
165	32	35	30	40	16	2	45	9500
165	32	35	30	40	16	3	45	9500
165	40	35	30	40	16	2	45	8500
165	40	35	30	40	16	3	45	8500
165	50	35	30	40	16	2	45	7500
165	50	35	30	40	16	3	45	7500
195	40	40	30	50	21	2	45	7000
195	40	40	30	50	21	3	45	7000
195	40	40	30	50	21	4	45	7000
195	50	40	30	50	21	2	45	6500
195	50	40	30	50	21	3	45	6500
195	50	40	30	50	21	4	45	6500
195	60	40	30	50	21	2	45	6000
195	60	40	30	50	21	3	45	6000
195	60	40	30	50	21	4	45	6000
[mm]	[mm]	[mm]	[mm]	[mm]	[mm]		[°]	[min-1]

Blanks	B	H	S	LEUCODUR	Class-No.	Ident-No.
	15	30.4	2	HL Board 06	152516	183056
	20	40.4	2	HL Board 06	152516	183057
	25	40.4	2	HL Board 06	152516	183058
	32	40.4	2	HL Board 06	152516	182419
	40	40.4	2	HL Board 06	152516	182420
	50	40.4	2	HL Board 06	152516	182421
	60	40.4	2	HL Board 06	152516	182422
	[mm]	[mm]	[mm]			

Blanks	B	H	S	LEUCODUR	Class-No.	Ident-No. [L]	Ident-No. [R]
	15	30.4	2	HL Board 06 Topline	152716	183680	183680
	20	40.4	2	HL Board 06 Topline	152716	183681	183681
	25	40.4	2	HL Board 06 Topline	152716	183682	183682
	32	40.4	2	HL Board 06 Topline	152716	182563	182562
	40	40.4	2	HL Board 06 Topline	152716	182565	182564
	50	40.4	2	HL Board 06 Topline	152716	182567	182566
	60	40.4	2	HL Board 06 Topline	152716	182569	182568
	[mm]	[mm]	[mm]				

120450

Groove Bed Cutterheads HW

Product

Drawing

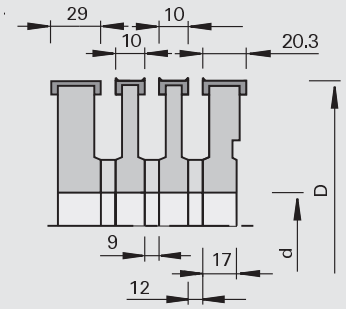

tungsten carbide [HW]

MEC

Machine / Application

- molders with groove bed section Weinig
- for cutting of guide grooves in solid woods

Design

- n max = 10,000 min-1
- single tools with spur
- Ident-No. 180536 without spur

Advantages

Notes

- application with the grain
- attention: replacement parts for old cutterhead sets: cutterhead width = 9 mm can be replaced with new cutterhead width = 10 mm when spacer width = 10 mm is replaced with spacer width = 9 mm cutterhead width = 10.5 mm can be replaced with cutterhead width = 10 mm

Ø D	B	Ø d	Z	Ident-No.
140	10	40	2+2	176066
140	20,3	40	2+2	176067
140	29	40	2	180536 s
140	10	50	2+2	176069
140	20,3	50	2+2	176070
[mm]	[mm]	[mm]		

Spare parts	Ø D	B	Ø d	Class-No.	Ident-No.
Spacers	70	9	40	955520	177308
Spacers	70	10	40	955520	162004
Spacers	70	12	40	955520	162706
Spacers	70	10	50	955520	163886
Spacers	70	12	50	955520	163887
	[mm]	[mm]	[mm]		

Turnover Knives	B	H	S	Class-No.	Ident-No.
Spurs	14	14	2	150559	003079
Turnover Knives	9,6	12	1.5	150515	171163
Turnover Knives	20	12	1.5	150516	178287
Turnover Knives	29,5	12	1.5	150515	180825
	[mm]	[mm]	[mm]		

Spare parts	Dimension	For Ident-No.	Class-No.	Ident-No.
Clamping Bars	B=7,2	176066, 176069	925300	168074
Set Screws	M5x12 DIN EN ISO 4028	176066, 176069	995161	050565
Countersunk Flat Headed Screws	M5x6 T20	176066, 176069	995125	176199
Adjusting Gauges	0,7	176066, 176069	985200	056096
Clamping Bars	B=17	176067, 176070	925300	167971
Set Screws	M8x16 DIN EN ISO 4028	176067, 176070, 180536	995161	164422
Countersink Screws	M5x10,8 T15	176067, 176070	995125	180840
Adjusting Gauges	1,0	176067, 176070, 180536	985200	011103
Clamping Bars	B=30	180536	925300	164185
Screwdrivers	SW2,5x100	176066, 176069	985730	168010
Screwdrivers	SW4x100	176067, 176070, 180536	985730	166091
Screwdrivers	T15x100	176067, 176070	985730	180470
Screwdrivers	T20x100	For all	985730	166092
	[mm]			

121450

Groove Bed Cutterhead Sets HW

Product

Drawing

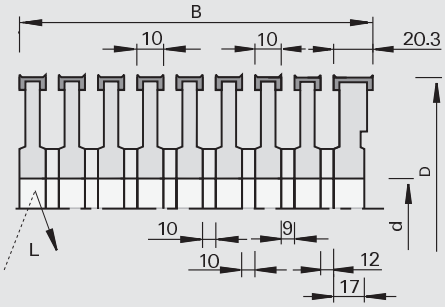

tungsten carbide [HW]

MEC

Machine / Application

- molders with groove bed section Weinig
- for cutting of guide grooves in solid woods

Design

- n max = 10,000 min-1

Advantages

Notes

- application with the grain
- complete tool sets for specific wood widths “B”

Ø D	B	Ø d	Z	Ident-No.
140	80	35	2+2	176071 &
140	100	35	2+2	176072 &
140	120	35	2+2	176073 &
140	140	35	2+2	176074 &
140	170	35	2+2	176075 &
140	80	40	2+2	176076 &
140	100	40	2+2	176077 &
140	120	40	2+2	176078 &
140	140	40	2+2	176079 &
140	170	40	2+2	176080 &
140	80	50	2+2	176081 &
140	100	50	2+2	176082 &
140	120	50	2+2	176083 &
140	140	50	2+2	176084 &
140	170	50	2+2	176085 &
[mm]	[mm]	[mm]		

120700

Spiral Cutterheads HW

Product

Drawing

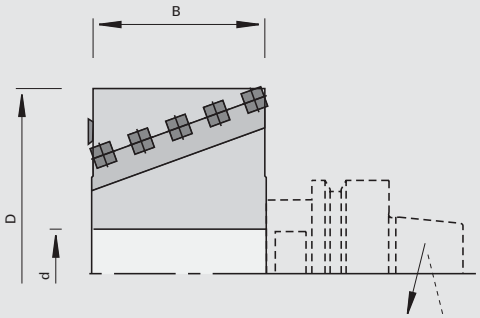

LEUCO CNC

tungsten carbide [HW]

MEC

Machine / Application

- stationary milling centers
- for dressing, rough-planing, jointing, rabbeting, copying of solid woods and laminated timber

Design

- with four-sided turnover knives, with rounded edges
- 2 front spurs HW
- spiral cutting layout of turnover knives and cut division
- high-tensile aluminum body

Advantages

- easy hogging, low cutting pressure and low noise level
- high hogging volume

Notes

- for HSK mounting arbors with double key without spacer
- for Ident-No. 183678 clamping length 50 mm with HSK mounting arbor
- for Ident-No. 183679 clamping length 80 mm with HSK mounting arbor

Ø D	B	Ø d	Z	nmax	Ident-No.
80	80	30	2+2+V2	18000	183678
80	100	30	2+2+V2	18000	183679
[mm]	[mm]	[mm]		[min-1]	

Turnover Knives	B	H	S	Class-No.	Ident-No.
Turnover Knives (with rounded edges R=50 mm)	15	15	2.5	150518	180454
	[mm]	[mm]	[mm]		

Spare parts	Dimension	Class-No.	Ident-No.
Countersunk Flat Headed Screws	M5x15,5 T20	995125	182112
Screwdrivers	T20x100	985730	166092
	[mm]		

120700

Spiral Cutterheads HW - Finish

Product

Drawing

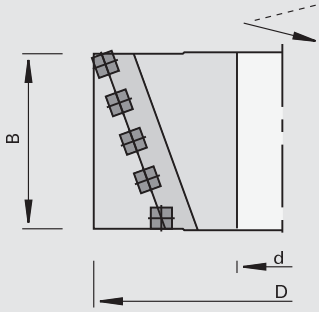

tungsten carbide [HW]

MEC

Machine / Application

- molders
- stationary milling centers
- for milling, rough-planing and finish-planing in solid woods

Design

- with four-sided turnover knives, with rounded edges
- spiral cutting layout of turnover knives and cut division
- high-tensile aluminum body

Advantages

- easy hogging, low cutting pressure and low noise level

Notes

- for finished cut

Ø D	B	Ø d	Z	nmax	Ident-No.
125	100	40	2+2	12000	182091 o
125	130	40	2+2	12000	182092 o
125	170	40	2+2	12000	182093 o
125	230	40	2+2	12000	182094 o
125	240	40	2+2	12000	182095 o
[mm]	[mm]	[mm]		[min-1]	

Turnover Knives	B	H	S	Class-No.	Ident-No.
Turnover Knives (with rounded edges R=150 mm)	15	15	2.5	150518	185274
	[mm]	[mm]	[mm]		

Spare parts	Dimension	Class-No.	Ident-No.
Countersunk Flat Headed Screws	M5x15,5 T20	995125	182112
Screwdrivers	T20x100	985730	166092
	[mm]		

320200

Planing Cutterheads HS

Product

Drawing

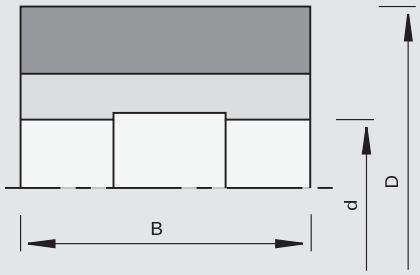

High Speed Steel [HS]

MEC

Machine / Application

- multi spindle plunging machines
- for planing of solid woods

Design

- n max = 9,000 min-1

Advantages

Notes

- HS-tipped knives (18%) 30x3 mm
- for adjusting the planing knives 2 adjustment rings are needed
- alternative cutting material: ST for soft and hard woods; HW for hard and exotic woods

Ø D	B	Ø d	Z	Ident-No.
125	80	40	4	179204
125	100	40	4	181195
125	130	40	4	179194
125	150	40	4	179195
125	180	40	4	179196
125	230	40	4	181190
[mm]	[mm]	[mm]		

Spare parts	Dimension	Class-No.	Ident-No.	
Clamping Bars	B=80	925300	179205	o
Clamping Bars	B=100	925300	181191	o
Clamping Bars	B=130	925300	179198	o
Clamping Bars	B=150	925300	179199	o
Clamping Bars	B=180	925300	179200	o
Clamping Bars	B=230	925300	181192	o
Adjustment Rings	125x40	985200	179201	o
Set Screws	M10x25 DIN EN ISO 4028	995161	168108	
Cranked Wrench Keys	SW5 DIN ISO 2936	985730	009674	
	[mm]			

320200

Hydro Planing Cutterheads HS

Product

Drawing

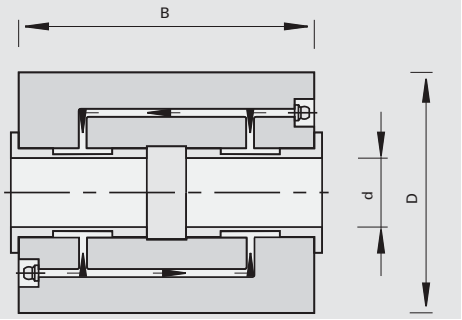

High Speed Steel [HS]

MEC

Machine / Application

- hydro profile molders
- for planing of solid woods

Design

- n max = 9,000 min-1

Advantages

- high concentric accuracy and precise tool balancing thanks to Hydro clamping (system Weinig) for precise concentricity tolerance
- high feed rates and optimum cutting quality

Notes

- HS-tipped knives 30 x 3 mm
- alternative cutting material: ST for soft and hard woods; HW for hard and exotic woods

Ø D	B	Ø d	Z	Hook angle	Ident-No.
143	60	40	4	27	178104 o
143	130	40	4	27	178105 o
143	230	40	4	27	178106 o
163	60	50	4	27	178107 o
163	100	50	4	27	178108 o
163	130	50	4	27	178109 o
163	150	50	4	27	178110 o
163	180	50	4	27	178112 o
163	230	50	4	27	178113 o
163	260	50	4	27	178115 o
163	310	50	4	27	178116 o
163	60	50	6	27	178117 o
163	100	50	6	27	178118 o
163	130	50	6	27	178119 o
163	150	50	6	27	178120 o
163	180	50	6	27	178122 o
163	230	50	6	27	178123 o
163	260	50	6	27	178125 o
163	310	50	6	27	178126 o
163	60	50	8	25	178127 o
163	100	50	8	25	178128 o
163	130	50	8	25	178129 o
163	150	50	8	25	178130 o
163	230	50	8	25	178131 o
163	260	50	8	25	178132 o
[mm]	[mm]	[mm]		[°]	

Spare parts	Dimension	Class-No.	Ident-No.
Set Screws	M12x25 DIN EN ISO 4028	995161	181466
Screwdrivers	SW6x200	985730	167817
Grease Guns		993270	163706
Grease Cartridges		993270	163707
	[mm]		

320200

Hydro-Rotaplane Cutterheads HS

Product

Drawing

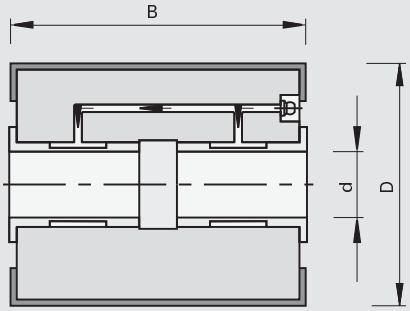

High Speed Steel [HS]

MEC

Machine / Application

- hydro profile molders
- for planing of solid woods

Design

- n max = 6,000 min-1

Advantages

- high concentric accuracy and precise tool balancing thanks to Hydro clamping (system Weinig) for precise concentricity tolerance
- high feed rates and optimum cutting quality

Notes

- HS-tipped knives 30 x 3 mm
- alternative cutting material: ST for soft and hard woods; HW for hard and exotic woods

Ø D	B	Ø d	Z	Hook angle	Ident-No.
203	150	50	6	27	178133 o
203	230	50	6	27	178134 o
203	150	50	8	27	178136 o
203	230	50	8	27	178137 o
203	310	50	8	27	178139 o
203	150	50	10	23	178141 o
203	230	50	10	23	178142 o
203	310	50	10	23	178144 o
203	100	50	12	23	178145 o
203	150	50	12	23	178146 o
203	230	50	12	23	178147 o
203	310	50	12	23	178149 o
203	100	50	16	20	178150 o
203	150	50	16	20	178151 o
[mm]	[mm]	[mm]		[°]	

Spare parts	Dimension	Class-No.	Ident-No.
Set Screws	M12x25 DIN EN ISO 4028	995161	181466
Screwdrivers	SW6x200	985730	167817
Grease Guns		993270	163706
Grease Cartridges		993270	163707
	[mm]		

320200

Hydro Planing Cutterheads HS - Quicklock

Product

Drawing

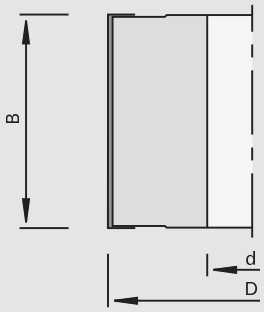

High Speed Steel [HS]

MEC

Machine / Application

- hydro profile molders
- for planing of solid woods

Design

- all knives are clamped automatically by impressurement via grease press
- clamping wedge numbered according to the chip evacuation gap
- n max = 9,000 min-1

Advantages

- high concentric accuracy and precise tool balancing thanks to hydro clamping (system Weinig) for precise concentricity tolerance
- high feed rates and optimum cutting quality
- simple handling
- short machine downtimes
- high balance quality

Notes

- HS-tipped knives 30 x 4 mm

Ø D	B	Ø d	Z	Hook angle	Ident-No.
143	100	40	4	27	183312 s
143	130	40	4	27	183313 s
143	150	40	4	27	183314 s
143	180	40	4	27	183315 s
143	210	40	4	27	183316 s
143	230	40	4	27	183317 s
143	240	40	4	27	183318 s
143	310	40	4	27	183319 s
143	320	40	4	27	183320 s
163	100	50	6	27	183321 s
163	130	50	6	27	183322 s
163	150	50	6	27	183323 s
163	180	50	6	27	183324 s
163	210	50	6	27	183325 s
163	230	50	6	27	183326 s
163	240	50	6	27	183327 s
163	310	50	6	27	183328 s
163	320	50	6	27	183329 s
163	150	50	8	25	183330 s
163	180	50	8	25	183331 s
163	210	50	8	25	183332 s
163	230	50	8	25	183333 s
163	240	50	8	25	183334 s
163	270	50	8	25	183335 s
163	310	50	8	25	183336 s
163	320	50	8	25	183337 s
203	150	50	10	23	183338 s
203	180	50	10	23	183339 s
203	210	50	10	23	183340 s
203	230	50	10	23	183341 s
203	240	50	10	23	183342 s
203	270	50	10	23	183343 s
203	310	50	10	23	183344 s
203	320	50	10	23	183345 s
203	150	50	12	23	183346 s
203	180	50	12	23	183347 s
203	210	50	12	23	183348 s
203	230	50	12	23	183349 s
[mm]	[mm]	[mm]		[°]	

Ø D	B	Ø d	Z	Hook angle	Ident-No.
203	240	50	12	23	183350 s
203	270	50	12	23	183351 s
203	310	50	12	23	183352 s
203	320	50	12	23	183353 s
[mm]	[mm]	[mm]		[°]	

Spare parts	Class-No.	Ident-No.
Grease Guns	993270	163706
Grease Cartridges	993270	163707

320200 / 332121 / 132121

Planing Cutterheads HS with centrifugal clamping

Product

Drawing

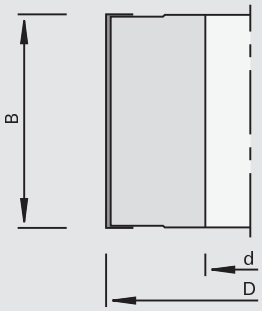

High Speed Steel [HS]

MEC

Machine / Application

- molders
- four-side molders
- for planing of solid woods

Design

- aluminum body
- n max = 9,000 min-1
- spring-loaded balls (b) hold the knife before clamping

Advantages

- quick tool change with centrifugal clamping, without clamping screws and without time-consuming adjustment procedure
- tempered precision chip breaker (a) for precise positioning of the knives
- very cost effective thanks to resharpenability
- closed design for low noise level

Notes

- HS-TRI -tipped knives
- alternative cutting material: HW

Ø D	B	Ø d	Z	Ident-No.
100	80	30	3	70469103 o
100	180	30	3	70469104 o
100	120	30	3	70469105 o
125	130	40	4	70469108 o
120	120	40	4	70469109 o
125	230	40	4	70469110 o
125	180	40	4	70469112 o
120	130	40	4	70469113 o
120	180	40	4	70469115 o
120	230	40	4	70469116 o
125	80	40	4	70469117 o
125	100	40	4	70469121 o
125	120	40	4	70469122 o
125	240	40	4	70469128 o
125	130	40	2	70469159 o
125	180	40	2	70469162 o
125	230	40	2	70469163 o
125	240	40	2	70469164 o
125	190	40	4	70469209 o
125	190	40	2	70469212 o
[mm]	[mm]	[mm]		

Turnover Knives	B	Cutting material	Class-No.	Ident-No.
	60	HS - TRI	332121	70469707 o
	80	HS - TRI	332121	70469708 o
	100	HS - TRI	332121	70469710 o
	120	HS - TRI	332121	70469712 o
	130	HS - TRI	332121	70469713 o
	136	HS - TRI	332121	70469736 o
	140	HS - TRI	332121	70469714 o
	150	HS - TRI	332121	70469715 o
	160	HS - TRI	332121	70469716 o
	180	HS - TRI	332121	70469718 o
	186	HS - TRI	332121	70469786 o
	190	HS - TRI	332121	70469719 o
	200	HS - TRI	332121	70469720 o
	210	HS - TRI	332121	70469721 o
	220	HS - TRI	332121	70469722 o
	230	HS - TRI	332121	70469723 o
	240	HS - TRI	332121	70469724 o
	260	HS - TRI	332121	70469726 o
	300	HS - TRI	332121	70469730 o
	310	HS - TRI	332121	70469731 o
	400	HS - TRI	332121	70469740 o
	410	HS - TRI	332121	70469741 o
	430	HS - TRI	332121	70469743 o
	500	HS - TRI	332121	70469750 o
	510	HS - TRI	332121	70469751 o
	610	HS - TRI	332121	70469761 o
	630	HS - TRI	332121	70469763 o
	640	HS - TRI	332121	70469764 o
	710	HS - TRI	332121	70469771 o
	1350	HS - TRI	332121	70469798 o
	[mm]			

Turnover Knives	B	Cutting material	Class-No.	Ident-No.
	80	HW	132121	70469908 o
	100	HW	132121	70469910 o
	120	HW	132121	70469912 o
	130	HW	132121	70469913 o
	140	HW	132121	70469914 o
	150	HW	132121	70469915 o
	160	HW	132121	70469916 o
	180	HW	132121	70469918 o
	200	HW	132121	70469920 o
	210	HW	132121	70469921 o
	220	HW	132121	70469922 o
	230	HW	132121	70469923 o
	240	HW	132121	70469924 o
	250	HW	132121	70469925 o
	260	HW	132121	70469926 o
	300	HW	132121	70469930 o
	610	HW	132121	70469999 o
	[mm]			

Spare parts	Class-No.	Ident-No.
Knife Changers	985720	70469100 o

320600

Profile Cutterheads

Product

Drawing

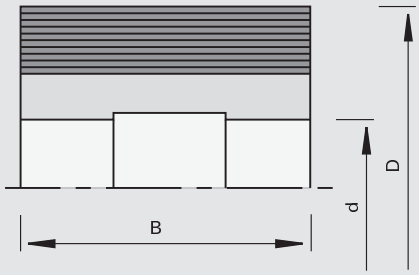

MEC

Machine / Application

- molders
- for profiling of solid woods

Design

- hook angle 25 degrees
- Ø 122 mm: n max = 9,000 min-1
- Ø 137 mm: n max = 8,000 min-1

Advantages

- high profile accuracy and surface quality thanks to knives sharpened in the cutterhead

Notes

- precise serration (60 degrees, 1.6 mm pitch) ensures tight knife clamping
- adjustable knives
- profile depth and cutting circle Ø see table
- for back-serrated blanks S = 5, 8, 10 mm
- included in delivery: cutter-head and wedges; for blanks see chapter Turnover knives, Profile Knives, Knives

Ø D	B	Ø d	Z	Ident-No.
122	40	40	4	179208
122	60	40	4	179209
122	80	40	4	179210
122	100	40	4	179211
122	130	40	4	179212
122	150	40	4	179213 o
122	180	40	4	179214
122	230	40	4	179215 o
137	60	50	4	179216 o
137	80	50	4	179217 o
137	100	50	4	179218 o
137	150	50	4	179219 o
137	180	50	4	179220 o
[mm]	[mm]	[mm]		

Spare parts	Dimension	Class-No.	Ident-No.
Clamping Bars	B=40	925300	179221 o
Clamping Bars	B=60	925300	179222 o
Clamping Bars	B=80	925300	179223 o
Clamping Bars	B=100	925300	179224 o
Clamping Bars	B=130	925300	179225 o
Clamping Bars	B=150	925300	179226 o
Clamping Bars	B=180	925300	179227 o
Clamping Bars	B=230	925300	179228 o
Dummy Pieces	B=40	925900	179229 o
Dummy Pieces	B=60	925900	179230 o
Dummy Pieces	B=80	925900	179231 o
Dummy Pieces	B=100	925900	179232 o
Dummy Pieces	B=130	925900	179233 o
Dummy Pieces	B=150	925900	179234 o
Dummy Pieces	B=180	925900	179235 o
Dummy Pieces	B=230	925900	179236 o
Set Screws	M10x20 DIN EN ISO 4028	995161	815807
Screwdrivers	SW5x150	985730	168703
	[mm]		

Maximum cutting circle diameter

	HS	HW	ST	HS	HW	HS	ST
Knife height H [mm]	50	50	55	60	60	70	70
Knife thickness S [mm]	8	10	10	8	10	8	10
Profile depth T [mm]	12	10	15	20	18	30	27
Dmax at D=122	161	161	171	181	181	201	201
Dmax at D=137	176	176	186	196	196	216	216

Maximum RPM

B (mm)	50	55	60	70
Dmax at D=122	161	171	181	201
Max.RPM (min-1):	9000	8400	8000	7200
Dmax at D=137	176	186	196	216
Max.RPM (min-1):	8200	7700	7300	6600

320600

Hydro Profile Cutterheads HS

Product

Drawing

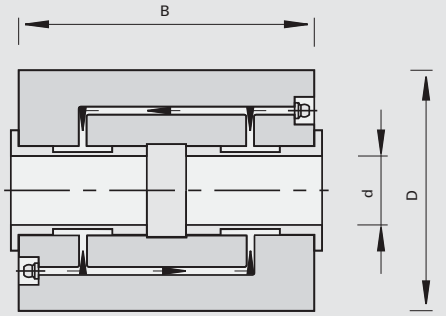

MEC

Machine / Application

- hydro profile molders
- for profiling of solid woods

Design

- the max. RPM depends from the knife height (see table "Max. RPM")

Advantages

- best cutting quality without knife marks at high feed rates
- precise concentricity tolerance (system Weinig) thanks to dual-chamber Hydro clamping
- high concentric accuracy and low operating vibration
- tight clamping thanks to precise serration (60 degrees, 1.6 mm pitch)

Notes

- adjustable knives
- profile depth and cutting circle Ø see table
- for back-serrated blanks S = 5, 8, 10 mm
- included in delivery: cutter-head and wedges; for blanks see chapter Turnover knives, Profile Knives, Knives

Ø D	B	Ø d	Z	Ident-No.
137	60	40	4	176342 o
137	100	40	4	176343 o
137	130	40	4	176344 o
137	150	40	4	176345 o
137	180	40	4	176346 o
137	230	40	4	176347 o
150	60	50	4	176348 o
150	60	50	6	176349 o
150	100	50	4	176350 o
150	100	50	6	176351 o
150	130	50	4	176352 o
150	130	50	6	176353 o
150	150	50	4	176354 o
150	150	50	6	176355 o
150	180	50	4	176356 o
150	180	50	6	176357 o
[mm]	[mm]	[mm]		

Ø D	B	Ø d	Z	Ident-No.
150	230	50	4	176358 o
150	230	50	6	176359 o
150	260	50	4	176360 o
150	260	50	6	176361 o
150	310	50	4	176362 o
150	310	50	6	176363 o
163	60	50	8	176364 o
163	100	50	8	176365 o
163	130	50	8	176366 o
163	150	50	8	176367 o
163	180	50	8	176368 o
163	230	50	8	176369 o
163	260	50	8	176370 o
163	310	50	8	176371 o
195	60	50	10	176372 o
195	100	50	10	176373 o
195	130	50	10	176374 o
195	150	50	10	176375 o
215	60	50	12	176380 o
215	100	50	12	176381 o
215	130	50	12	176382 o
215	150	50	12	176383 o
[mm]	[mm]	[mm]		

Spare parts	Dimension	Class-No.	Ident-No.
Set Screws	M12x25 DIN EN ISO 4028	995161	181466
Screwdrivers	SW6x200	985730	167817
Grease Guns		993270	163706
Grease Cartridges		993270	163707
	[mm]		

Maximum cutting circle diameter

	HS	HW	ST	HS	HW	HS	ST
Knife height H [mm]	50	50	55	60	60	70	70
Knife thickness S [mm]	8	10	10	8	10	8	10
Profile depth T [mm]	12	10	15	20	18	30	27
Dmax at D=137	174	174	184	194	194	214	214
Dmax at D=150	189	189	199	209	209	229	229
Dmax at D=163	202	202	212	222	222	242	242

Maximum RPM

Knife height H [mm]	50	55	60	70
Dmax at D=137	174	184	194	214
Max.RPM (min-1):	8300	7800	7400	6700
Dmax at D=150	189	199	209	229
Max.RPM (min-1):	7700	7300	6900	6300
Dmax at D=163	202	212	222	242
Max.RPM (min-1):	7200	6800	6500	6000
Dmax for D=215	254	264	274	294
Max.RPM (min-1):	5700	5400	5200	4900

320208

Planing Cutterheads HS with Weinig HSK

Product

Drawing

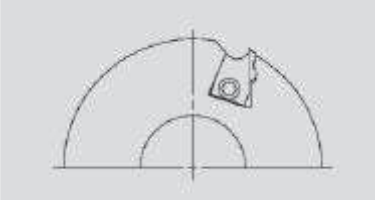

High Speed Steel [HS]

MEC

Machine / Application

- molders "Weinig Powermat"
- for planing of solid woods

Design

- n max = 12,000 min-1

Advantages

- quick knife change thanks to Centrolock clamping bar

Notes

- clamping by means of front screw
- HS-tipped turnover knives
- alternative cutting material: HW for hard woods, glued timber and MDF
- picture shows sense of rotation left (acc. to DIN left)
- Turnover Knives see chapter Turnover Knives, Knives, Inserts

Ø D	B	Ø d	Z	Ident-No. [L]	Ident-No. [R]
93	60	Weinig-HSK	2	181728 o	181737 o
93	80	Weinig-HSK	2	181729 o	181738 o
93	100	Weinig-HSK	2	181730 o	181739 o
93	130	Weinig-HSK	2	181731 o	181740 o
93	150	Weinig-HSK	2	181732 o	181741 o
93	170	Weinig-HSK	2	181733 o	181742 o
93	190	Weinig-HSK	2	181734 o	181743 o
93	210	Weinig-HSK	2	181735 o	181744 o
93	240	Weinig-HSK	2	181736 o	181745 o
[mm]	[mm]	[mm]			

Spare parts	Class-No.	Ident-No.
Hammer for Releasing the Knives	985740	181746 o
HSK-Mounting Device	985202	181747 o

320608

Profile Cutterheads HS - Powerlock with Weinig HSK (blanks S=5,8,10 mm)

Product

Drawing

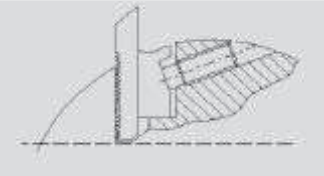

High Speed Steel [HS]

MEC

Machine / Application

- molders "Weinig Powermat"
- for profiling of solid woods

Design

- hook angle 20 degrees (special 12 degrees)
- n max = 12,000 min-1

Advantages

- fixed-shape knife clamping by highly precise serration 60 degrees, partition 1.6mm
- high profile accuracy and surface quality thanks to knives sharpened in the cutterhead

Notes

- adjustable knives
- possibility of sideways stop in the cutterhead
- control of adjusting range of the knives through lunettes
- picture shows sense of rotation right (acc. to DIN right)
- for all back-serrated blanks S = 5, 8, 10 mm
- included in delivery: cutter-head and wedges; for blanks see chapter Turnover knives, Profile Knives, Knives

Ø D	B	Ø d	Z	Ident-No. [L]	Ident-No. [R]
90	40	Weinig-HSK	2	182312 o	182314 o
90	60	Weinig-HSK	2	181766 o	181775 o
90	80	Weinig-HSK	2	181767 o	181776 o
90	100	Weinig-HSK	2	181768 o	181777 o
90	130	Weinig-HSK	2	181769 o	181778 o
90	150	Weinig-HSK	2	181770 o	181779 o
90	170	Weinig-HSK	2	181771 o	181780 o
90	190	Weinig-HSK	2	182313 o	181781 o
90	210	Weinig-HSK	2	181773 o	181782 o
90	240	Weinig-HSK	2	181774 o	181783 o
90	80	Weinig-HSK	4	181785 o	181794 o
90	100	Weinig-HSK	4	181786 o	181795 o
90	130	Weinig-HSK	4	181787 o	181796 o
90	150	Weinig-HSK	4	181788 o	181797 o
90	170	Weinig-HSK	4	181789 o	181798 o
90	190	Weinig-HSK	4	181790 o	181799 o
90	210	Weinig-HSK	4	181791 o	181800 o
90	40	Weinig-HSK	4	182315 o	182316 o
90	60	Weinig-HSK	4	181784 o	182317 o
90	240	Weinig-HSK	4	181792 o	182318 o
[mm]	[mm]	[mm]			

222068

PowerDiaProfiler DP

Product

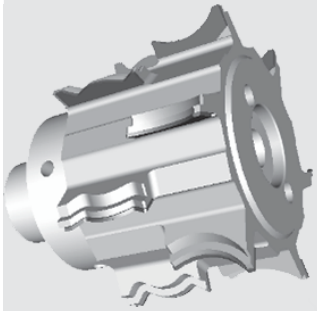

Drawing

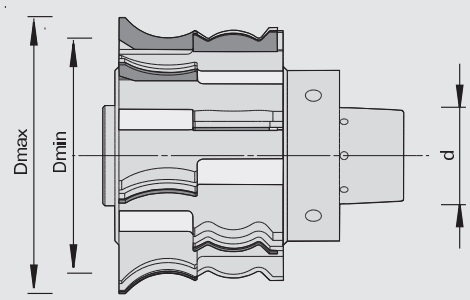

LEUCO power DiaProfiler

polycrystalline diamond [DP]

MEC

Machine / Application

- molding automats with HSK-interface
- for profiling of MDF, hard and exotic woods

Design

- Topline (polished knife face and precise cutting edge)

Advantages

- highest concentricity
- feed speed and workpiece surface like in the case of jointed HW-tools

Notes

- optimal cutting speed 80 - 100m/s
- profiles according to customer specifications
- price on request
- n max = depending on L2 and weight (see chart)

Ø Dmax	ø Dmin	Ø d	Z	Recommended feed
180	100	Weinig HSK	2	33
180	100	Weinig HSK	3	50
180	100	Weinig HSK	4	66
180	100	Weinig HSK	5	83
180	100	Weinig HSK	6	100
180	100	Weinig HSK	7	117
180	100	Weinig HSK	8	133
[mm]	[mm]	[mm]		[m/min]

Diagram for PowerLock-Adapter

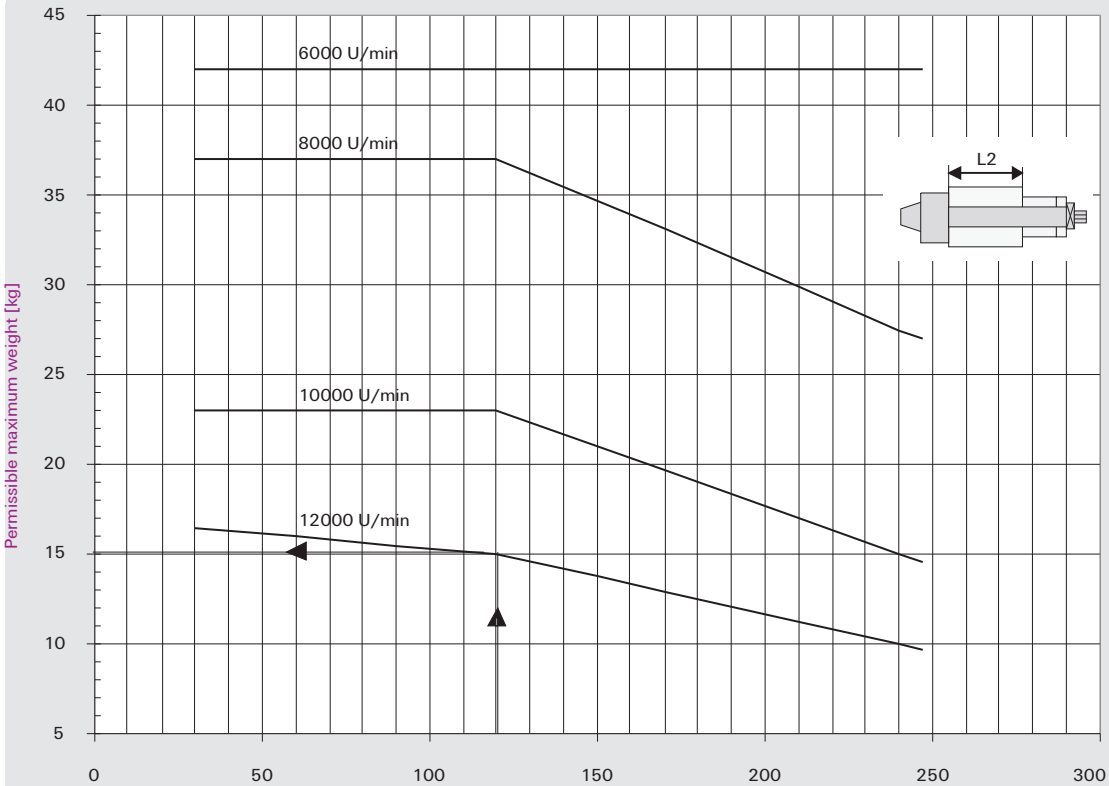

Tool length L2 [mm]

120505

Glue Joint Profile Cutterheads HW

Product

Drawing

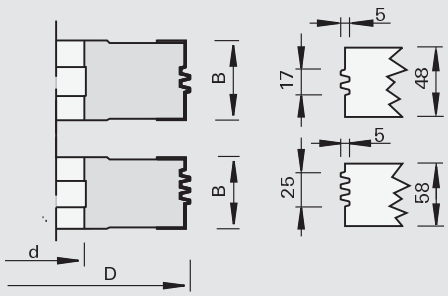

LEUCO DUR

tungsten carbide [HW]

MAN

Machine / Application

- molders
- table shapers
- for cutting of edge glue joints in solid woods

Design

- cutting edges parallel to cutter axis
- n = 5,700 - 9,800 min-1

Advantages

- continuous high profile accuracy thanks to turnover knives

Notes

- application against feed
- fit of joints can be defined by moving the knives sideways by means of dials (see spare parts)
- when delivered, tool is set to 0.3 mm joint play

Ø D	B	Ø d	Ø dmax	Z	H	Ident-No.
135	50	30	50	2	17-48	177007
135	60	30	50	2	25-58	177008 s
[mm]	[mm]	[mm]	[mm]		[mm]	

Turnover Knives	B	H	S	Class-No.	Ident-No.
	50	23	2	151555	180431
	60	23	2	151555	180432
	[mm]	[mm]	[mm]		

Spare parts	Dimension	For Ident-No.	Class-No.	Ident-No.
Pressure Jaws	48x11x6	177007	925300	50591365
Pressure Jaws	58x11x6	177008	925300	180434
Clamping Parts	12x8,5/M8L	For all	925100	180357
Clamping Setscrews	M8x26 SW4	For all	995161	180340
Screwdrivers	SW4x100	For all	985730	166091
	[mm]			

Spare parts	Dimension	Class-No.	Ident-No.
Adjustment Dials	0,1 + 0,15	995490	180435
Adjustment Dials	0,15 + 0,2	995490	180436
Adjustment Dials	0,2 + 0,25	995490	180437
Adjustment Dials	0,25 + 0,3	995490	180438
Adjustment Dials	0,3 + 0,35	995490	180439
	[mm]		

120525

Miter Lock Joint Profile Cutterheads HW

Product

Drawing

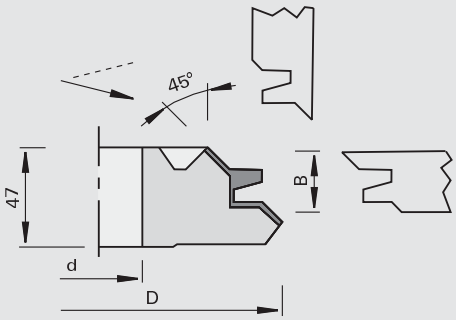

tungsten carbide [HW]

MAN

Machine / Application

- molders
- table shapers
- for cutting of miter lock joints in solid woods and wood-based panels

Design

- body made from high-strength aluminium alloy
- cutting edges parallel to cutter axis
- n = 4,600 - 7,800 min-1

Advantages

- continuous high profile accuracy thanks to profile knives

Notes

- application against feed
- wood thickness approx. 15 mm to max. 26 mm

Ø D	B	Ø d	Z	Ident-No.
170	26	30	2+2	176097
[mm]	[mm]	[mm]		

Turnover Knives	B	H	S	Class-No.	Ident-No.
Grooving / Chamfering Knife	5,0 /2,6		5.0	150509	184275
Miter Glue Joint Profile Knives	39,5	12	1.5	151547	165916
	[mm]	[mm]	[mm]		

Spare parts	Dimension	Class-No.	Ident-No.
Pressure Jaws	38x11x6	925300	180538
Clamping Parts	12x8,5/M8L	925100	180357
Clamping Setscrews	M8x26 SW4	995161	180340
Countersink Screws	M5x10,8 T15	995125	180840
Screwdrivers	SW4x100	985730	166091
Screwdrivers	T15x100	985730	180470
	[mm]		

327110 / 327130

Finger Joint Cutters HS

Product

Drawing

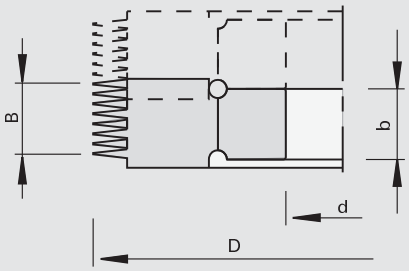

High Speed Steel [HS]

MEC

Machine / Application

- finger joint machines
- machines with and without cross-cutting device
- for longitudinal joints in soft woods

Design

- standard, for PUR glueing and topcoat

Advantages

- strong flank surface pressure for PUR glues (fiber-free)
- increased edge lives and higher wear resistance and gliding features thanks to Topcoat coating

Notes

- for machines with cross-cutting device, finger length 4/4,5, 10/11, 15/16,5, 20/22
- for machines without cross-cutting device, finger length 10/10, 15/15, 20/20

Ø D	B	b	Ø d	Z	Division	Finger joint length	Number of finger joints	nmax		Ident-No.
160	28,6	26.6	50	2+2	3.8	10/10	7	8000		175740
160	28,6	26.6	50	2+2	3.8	10/11	7	8000		175741
160	32,4	30.4	50	2+2	3.8	10/11	8	8000		178966
160	28,6	26.6	50	3+3	3.8	10/11	7	8000		181008
160	32,4	30.4	50	3+3	1.6	4/4,5	20	9000		182122 s
170	28,6	26.6	50	2+2	3.8	15/15	7	8000		175742
170	28,6	26.6	50	2+2	3.8	15/16,5	7	8000		175743
170	28,6	26.6	50	3+3	3.8	15/16,5	7	8000		182668
180	33	31	50	2+2	6.2	20/20	5	8000		175744
180	33	31	50	2+2	6.2	20/22	5	8000		175745
250	26	24	50	3+3	1.6	4/4,5	16	6000		182113 s
250	28,6	26.6	50	3+3	3.8	10/10	7	6000		175746 s
250	28,6	26.6	50	3+3	3.8	10/11	7	6000		175747
250	30	28	50	6+6	2.8	6/7	10	6000		192467 s
255	30	28	50	6+6	2.8	6/7	10	6000		192468 s
260	28,6	26.6	50	3+3	3.8	15/15	7	6000		175748
260	28,6	26.6	50	3+3	3.8	15/16,5	7	6000		175749
260	33	31	50	3+3	6.2	20/22	5	6000		175751
[mm]	[mm]	[mm]	[mm]		[mm]	[mm]	[pc.]	[min-1]		

Ø D	B	b	Ø d	Z	Division	Finger joint length	Number of finger joints	nmax		Ident-No.
170	28,6	26.6	50	2+2	3.8	15/15	7	8000	for PUR glueing	189715 s
180	33	31	50	2+2	6.2	20/20	5	8000	for PUR glueing	192262 s
260	28,6	26.6	50	3+3	3.8	15/15	7	6000	for PUR glueing	189716 s
260	33	31	50	3+3	6.2	20/20	5	6000	for PUR glueing	192263 s
[mm]	[mm]	[mm]	[mm]		[mm]	[mm]	[pc.]	[min-1]		

Ø D	B	b	Ø d	Z	Division	Finger joint length	Number of finger joints	nmax		Ident-No.
160	28,6	26.6	50	2+2	3.8	10/10	7	8000	topcoat	192190 s
160	28,6	26.6	50	2+2	3.8	10/11	7	8000	topcoat	192127
160	32,4	30.4	50	2+2	3.8	10/11	8	8000	topcoat	192199 s
160	28,6	26.6	50	3+3	3.8	10/11	7	8000	topcoat	192200 s
160	32,4	30.4	50	3+3	1.6	4/4,5	20	9000	topcoat	192202 s
170	28,6	26.6	50	2+2	3.8	15/15	7	8000	topcoat	192191 s
170	28,6	26.6	50	2+2	3.8	15/16,5	7	8000	topcoat	192192 s
170	28,6	26.6	50	3+3	3.8	15/16,5	7	8000	topcoat	192203 s
180	33	31	50	2+2	6.2	20/20	5	8000	topcoat	192193 s
180	33	31	50	2+2	6.2	20/22	5	8000	topcoat	192194 s
[mm]	[mm]	[mm]	[mm]		[mm]	[mm]	[pc.]	[min-1]		

Ø D	B	b	Ø d	Z	Division	Finger joint length	Number of finger joints	nmax		Ident-No.
250	26	24	50	3+3	1.6	4/4,5	16	6000	topcoat	192201 s
250	28,6	26.6	50	3+3	3.8	10/10	7	6000	topcoat	192195 s
250	28,6	26.6	50	3+3	3.8	10/11	7	6000	topcoat	192126
250	30	28	50	6+6	2.8	6/7	10	6000	topcoat	192466 s
255	30	28	50	6+6	2.8	6/7	10	6000	topcoat	192469 s
260	28,6	26.6	50	3+3	3.8	15/15	7	6000	topcoat	192196 s
260	28,6	26.6	50	3+3	3.8	15/16,5	7	6000	topcoat	192197 s
260	33	31	50	3+3	6.2	20/22	5	6000	topcoat	192198 s
[mm]	[mm]	[mm]	[mm]		[mm]	[mm]	[pc.]	[min-1]		

327610 / 327630

Finger Joint cutters HW - real Z=4 resp. Z=6

Product

Drawing

High Speed Steel [HS]

MEC

Machine / Application

- high-performance finger joint machines
- for longitudinal joints in soft woods

Design

- real Z=4 or Z=6 for high feed rates
- standard, for PUR glueing and topcoat

Advantages

- constant finger quality even with high feed rates thanks to double number of teeth compared to standard design
- longer edge life, higher wear resistance and gliding features thanks to topcoat coating

Notes

- no. of cutters: see table

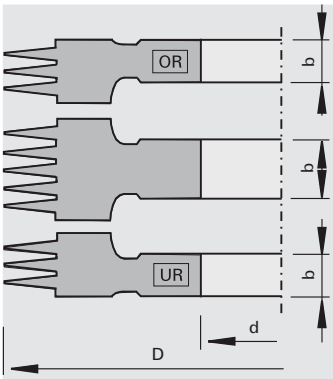

cutting height	number of cutters
15 mm	OR + UR
34 mm	OR + 1 + UR
53 mm	OR + 2 + UR
72 mm	OR + 3 + UR
91 mm	OR + 4 + UR
110 mm	OR + 5 + UR
129 mm	OR + 6 + UR
148 mm	OR + 7 + UR
167 mm	OR + 8 + UR
186 mm	OR + 9 + UR
208 mm	OR + 10 + UR
260 mm	OR + 13 + UR
310 mm	OR + 16 + UR

Ø D	B	b	Ø d	Z	Division	Finger joint length	Number of finger joints	nmax		Ident-No.
170	26,4	14.8	50	4	3.8	15/15	3	8000	top cutter	182675 #
170	41,0	19	50	4	3.8	15/15	5	8000	base cutter	182676 #
170	26,4	14.8	50	4	3.8	15/15	3	8000	bottom cutter	182677 #
170	26,4	14.8	50	4	3.8	15/16,5	3	8000	top cutter	182678 #
170	41,0	19	50	4	3.8	15/16,5	5	8000	base cutter	182679 #
170	26,4	14.8	50	4	3.8	15/16,5	3	8000	bottom cutter	182680 #
250	26,4	15.4	50	6	3.8	10/11	3	6000	top cutter	189930
250	41,0	19	50	6	3.8	10/11	5	6000	base cutter	182682
250	26,4	15.4	50	6	3.8	10/11	3	6000	bottom cutter	189931
[mm]	[mm]	[mm]	[mm]		[mm]	[mm]	[pc.]	[min-1]		

Ø D	B	b	Ø d	Z	Division	Finger joint length	Number of finger joints	nmax		Ident-No.
170	26,4	14.8	50	4	3.8	15/15	3	8000	top cutter for PUR glueing	192264 s
170	41,0	19	50	4	3.8	15/15	5	8000	base cutter for PUR glueing	192265 s
170	26,4	14.8	50	4	3.8	15/15	3	8000	bottom cutter for PUR glueing	192266 s
180	27,2	17.2	50	3	6.2	20/20	2	8000	top cutter for PUR glueing	192267 s
180	39,6	19.1	50	3	6.2	20/20	3	8000	base cutter for PUR glueing	192268 s
180	27,2	17.2	50	3	6.2	20/20	2	8000	bottom cutter for PUR glueing	192269 s
[mm]	[mm]	[mm]	[mm]		[mm]	[mm]	[pc.]	[min-1]		

Ø D	B	b	Ø d	Z	Division	Finger joint length	Number of finger joints	nmax		Ident-No.
170	26,4	14.8	50	4	3.8	15/15	3	8000	top cutter/topcoat	192204 s
170	41,0	19	50	4	3.8	15/15	5	8000	base cutter/topcoat	192205 s
170	26,4	14.8	50	4	3.8	15/15	3	8000	bottom cutter/topcoat	192206 s
170	26,4	14.8	50	4	3.8	15/16,5	3	8000	top cutter/topcoat	192207 s
170	41,0	19	50	4	3.8	15/16,5	5	8000	base cutter/topcoat	192208 s
170	26,4	14.8	50	4	3.8	15/16,5	3	8000	bottom cutter/topcoat	192209 s
250	26,4	15.4	50	6	3.8	10/11	3	6000	top cutter/topcoat	192210 s
250	41,0	19	50	6	3.8	10/11	5	6000	base cutter/topcoat	192211 s
250	26,4	15.4	50	6	3.8	10/11	3	6000	bottom cutter/topcoat	192212 s
[mm]	[mm]	[mm]	[mm]		[mm]	[mm]	[pc.]	[min-1]		

527110

Finger Joint Cutters HS - Solid 34

Product

Drawing

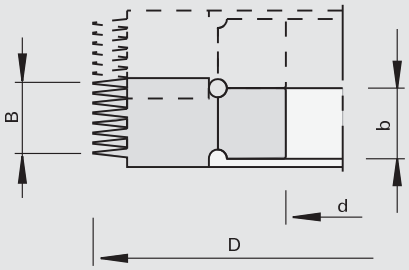

High Speed Steel [HS]

MEC

Machine / Application

- finger joint machines
- machines with and without cross-cutting device
- for longitudinal joints in knotty soft woods

Design

- cutting edge: HS Solid 34

Advantages

- compared to traditional HS finger joint cutters the edge life is 2 - 3 times as long
- high bending strength
- reduced risk of tooth breaking

Notes

- for machines with cross-cutting device, finger length 10/11, 15/16,5, 20/22
- for machines without cross-cutting device, finger length 10/10, 15/15, 20/20

Ø D	B	b	Ø d	Z	Division	Finger joint length	Number of finger joints	nmax		Ident-No.
160	28,6	26.6	50	2+2	3.8	10/10	7	8000		183231 s
160	28,6	26.6	50	2+2	3.8	10/11	7	8000		183232 s
160	32,4	30.4	50	2+2	3.8	10/11	8	8000		183233 s
160	28,6	26.6	50	3+3	3.8	10/11	7	8000		183234 s
170	28,6	26.6	50	2+2	3.8	15/16,5	7	8000		183235 s
170	28,6	26.6	50	2+2	3.8	15/15	7	8000		183230
170	28,6	26.6	50	3+3	3.8	15/16,5	7	8000		183236 s
180	33	26.6	50	2+2	6.2	20/20	5	8000		183237 s
180	33	31	50	2+2	6.2	20/22	5	8000		183238 s
250	28,6	31	50	3+3	3.8	10/10	7	6000		183239 s
250	28,6	26.6	50	3+3	3.8	10/11	7	6000		183228
260	28,6	26.6	50	3+3	3.8	15/15	7	6000		183240 s
260	28,6	26.6	50	3+3	3.8	15/16,5	7	6000		183229
260	33	31	50	3+3	6.2	20/22	5	6000		183241 s
[mm]	[mm]	[mm]	[mm]		[mm]	[mm]	[pc.]	[min-1]		

527610

Finger Joint Cutters HS - Solid 34

Product

Drawing

High Speed Steel [HS]

MEC

Machine / Application

- high-performance finger joint machines
- for longitudinal joints in soft woods

Design

- cutting edge: HS Solid 34
- real Z=4 or Z=6 for high feed rates

Advantages

- compared to traditional HS finger joint cutters the edge life is 2 - 3 times as long
- high bending strength
- reduced risk of tooth breaking
- constant finger quality even with high feed rates thanks to double number of teeth compared to standard design

Notes

- no. of cutters: see table

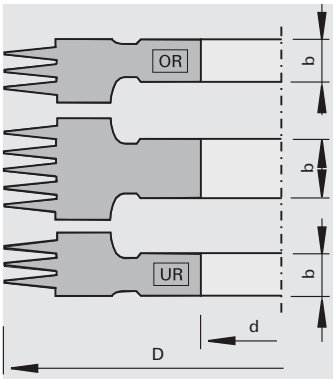

cutting height	number of cutters
15 mm	OR + UR
34 mm	OR + 1 + UR
53 mm	OR + 2 + UR
72 mm	OR + 3 + UR
91 mm	OR + 4 + UR
110 mm	OR + 5 + UR
129 mm	OR + 6 + UR
148 mm	OR + 7 + UR
167 mm	OR + 8 + UR
186 mm	OR + 9 + UR
208 mm	OR + 10 + UR
260 mm	OR + 13 + UR
310 mm	OR + 16 + UR

Ø D	B	b	Ø d	Z	Division	Finger joint length	Number of finger joints	nmax		Ident-No.
170	26,4	14.8	50	4	3.8	15/15	3	8000	top cutter	183242 s
170	41,0	19	50	4	3.8	15/15	5	8000	base cutter	183243 s
170	26,4	14.8	50	4	3.8	15/15	3	8000	bottom cutter	183244 s
170	26,4	14.8	50	4	3.8	15/16,5	3	8000	top cutter	183247 s
170	41,0	19	50	4	3.8	15/16,5	5	8000	base cutter	183245 s
170	26,4	14.8	50	4	3.8	15/16,5	3	8000	bottom cutter	183246 s
250	26,4	14.8	50	6	3.8	10/11	3	6000	top cutter	192270
250	41,0	19	50	6	3.8	10/11	5	6000	base cutter	183249
250	26,4	14.8	50	6	3.8	10/11	3	6000	bottom cutter	192271
[mm]	[mm]	[mm]	[mm]		[mm]	[mm]	[pc.]	[min-1]		

127110

Finger Joint Cutters HW

Product

Drawing

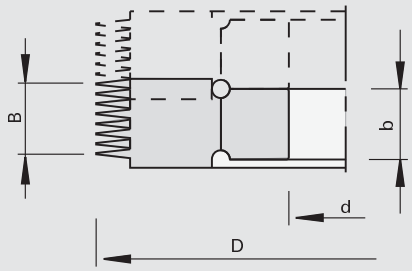

tungsten carbide [HW]

MEC

Machine / Application

- finger joint machines
- machines with cross-cutting device
- for longitudinal joints in hard and exotic woods

Design

Advantages

Notes

- for machines with cross-cutting device, finger length 10/11, 15/16,5
- for machines without cross-cutting device, finger length 10/10, 15/15

Ø D	B	b	Ø d	Z	Division	Finger joint length	Number of finger joints	nmax	Ident-No.
160	28,6	26.6	50	2+2	3.8	10/10	7	8000	175732 s
160	28,6	26.6	50	2+2	3.8	10/11	7	8000	175733
170	28,6	26.6	50	2+2	3.8	15/15	7	8000	175734 s
170	28,6	26.6	50	2+2	3.8	15/16,5	7	8000	175735 s
250	28,6	26.6	50	3+3	3.8	10/10	7	6000	175736 s
250	28,6	26.6	50	3+3	3.8	10/11	7	6000	175737
260	28,6	26.6	50	3+3	3.8	15/15	7	6000	175738 s
260	28,6	26.6	50	3+3	3.8	15/16,5	7	6000	175739 s
[mm]	[mm]	[mm]	[mm]		[mm]	[mm]	[pc.]	[min-1]	

396961

Finger Joint Cutterheads - with exchangeable HS cutting edges

Product

Drawing

LEUCO TOP COAT

High Speed Steel [HS]

MEC

Machine / Application

- finger joint machines
- for longitudinal joints in highly stressed components

Design

- tool body made from steel
- 4/6 exchangeable knives (160 mm) or 6/8 exchangeable knives (250 mm) for particularly high feedrates
- secured against twisting
- cutting material: HS-Topcoat

Advantages

- multiple edge lives compared to conventional material, increased edge lives and higher wear resistance and gliding features thanks to Topcoat coating

Notes

- included in delivery: tool body without knife inserts

Ø D	Ø D1	B	b	Ø d	Z	nmax	Ident-No.
129.8	160/170	30,4	30.4	50	2+2	8500	192180 s
129.8	160/170	30,4	30.4	50	3+3	8500	192181 s
216	250/260	30,4	30.4	50	2+2	6000	192182 s
216	250/260	30,4	30.4	50	3+3	6000	192183 s
216	250/260	30,4	30.4	50	4+4	6000	192188 s
[mm]	[mm]	[mm]	[mm]	[mm]		[min-1]	

Overview

wood width in mm	Number of cutters	wood width in mm	Number of cutters
27	1	179	6
58	2	210	7
88	3	240	8
118	4	271	9
149	5	297	10

Knives	Class-No.	Ident-No.
HS insert Topcoat 10/10	332924	192184
HS insert Topcoat 10/11	332924	192185
HS insert Topcoat 15/15	332924	192186 s
HS insert Topcoat 15/16.5	332924	192187 s

Spare parts	Dimension	Class-No.	Ident-No.
Set Screws	M8x20 DIN EN ISO 4028	995161	001625
Screwdrivers	SW4	985730	50931919
	[mm]		

127210

Finger Joint Cutters disc-type HW

Product

Drawing

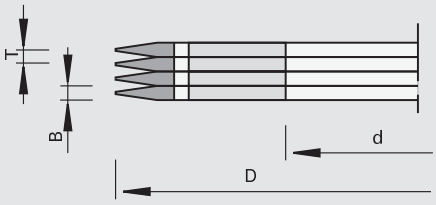

LEUCO DUR

tungsten carbide [HW]

MEC

Machine / Application

- finger joint machines Grecon/ Dimter, SMB, Scharpf + Kögel, Dieffenbacher, NKT
- machines with cross-cutting device
- for longitudinal joints in soft and hard woods

Design

- high-tensile steel body
- Topline grinding
- Ø 160 mm: n max = 11,800 min-1
- Ø 250 mm: n max = 7,400 min-1
- Ø 260 mm: n max = 7,200 min-1

Advantages

- extremely long edge lives thanks to the special coordination of cutting material to the material to be cut and the spiral arrangement of the cutting edges

Notes

- adjustable to any wood thickness with bushing

Ø D	B	Ø d	Z	Division	Finger joint length		Ident-No.
160	3,8	70	2	3.8	10/11	soft wood	177561 s
160	3,8	70	2	3.8	10/11	hard woods/exotic woods	177562 s
160	3,8	70	4	3.8	10/11	soft woods	177563
160	3,8	70	4	3.8	10/11	hard woods/exotic woods	177564
250	3,8	70	6	3.8	10/11	hard woods/exotic woods	180938
250	3,8	70	6	3.8	10/11	soft woods	180939
260	3,8	70	6	3.8	15/16	soft woods	178253 s
[mm]	[mm]	[mm]		[mm]	[mm]		

127230

Finger Joint Cutters disc-type HW - coated

Product

Drawing

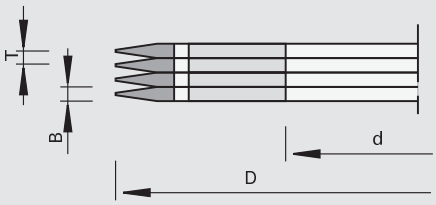

LEUCO TOP COAT

tungsten carbide [HW]

MEC

Machine / Application

- finger joint machines Grecon/ Dimter, SMB, Scharpf + Kögel, Dieffenbacher, NKT
- machines with cross-cutting device
- for longitudinal joints in soft and hard woods

Design

- high-tensile steel body
- HW Topcoat coating
- Ø 160 mm: n max = 11,800 min-1
- Ø 250 mm: n max = 7,400 min-1

Advantages

- extremely long edge lives thanks to coated cutting edge material and the spiral arrangement of the cutting edges
- compared to traditional HW finger joint cutters the edge live is 2 - 3 times as long

Notes

- adjustable to any wood thickness with bushing

Ø D	B	Ø d	Z	Division	Finger joint length		Ident-No.
160	3,8	70	4	3.8	10/11	soft woods	181230 s
160	3,8	70	4	3.8	10/11	hard woods/exotic woods	181231 s
250	3,8	70	6	3.8	10/11	hard woods/exotic woods	181232 s
250	3,8	70	6	3.8	10/11	soft woods	181233
[mm]	[mm]	[mm]		[mm]	[mm]		

127310

Edge Finger Joint Cutters HW

Product

Drawing

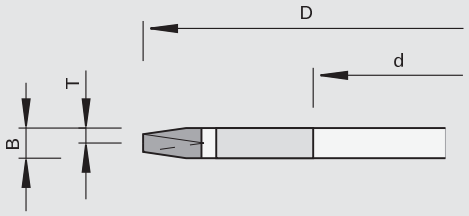

tungsten carbide [HW]

MEC

Machine / Application

- finger joint machines
- for cutting of closed visible longitudinal joints in hard and soft woods

Design

- high-tensile steel body
- Ø 149 mm: n max = 12,700 min-1
- Ø 160 mm: n max = 11,800 min-1
- Ø 239 mm: n max = 7,900 min-1
- Ø 250 mm: n max = 7,400 min-1

Advantages

Notes

- in combination with finger joint cutters with same Ø and pitch
- Ø 149 mm and Ø 239 mm (half shoulder) only with scoring saw blade

Ø D	B	Ø d	Z	Division	Finger joint length	Ident-No.
149	3,8	70	4	3.8	5	180916
160	11,4	70	4	3.8	10	177574
239	3,8	70	6	3.8	10	180917 s
239	11,4	70	6	3.8	10	181245
250	11,4	70	6	3.8	10	177576
[mm]	[mm]	[mm]		[mm]	[mm]	

997300

Bushings for Finger Joint Cutters

Product

Drawing

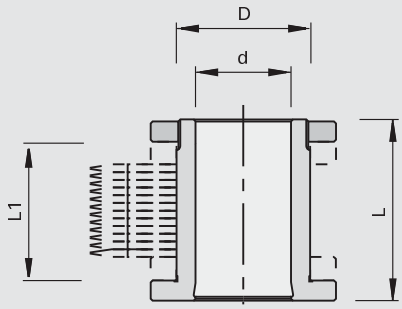

Machine / Application

- for clamping of finger joint cutters and edge finger joint cutters

Design

- high-tensile steel body
- spacers Ø 97 mm for cutters Ø 160-210 mm (not required)

Advantages

- high concentric and runout accuracy
- for varying wood thicknesses

Notes

- fill intermediate sizes with spacers
- for cutter Ø 250 mm install at least one spacer Ø 177 on top and bottom
- fastening nut or hydraulic clamping for cutter attachment must be ordered separately
- for cutter sets over 100 mm height we recommend hydraulic clamping
- the bushing length depends on the wood height "H" and on the type of nut
- accessories: mounting device, mounting ring and wrench is imperative for self-resharpening

Ø D	Ø d	L	L1	Ident-No.
70	50	90	57	178188
70	50	120	87	181035
70	50	130	97	178171
70	50	195	162	178172
70	50	220	187	178173
70	50	240	207	178174
[mm]	[mm]	[mm]	[mm]	

Spacer Rings	Ø D	B	Ø d	Class-No.	Ident-No.
	100	7,6	70	955520	180940
	100	11,4	70	955520	180941
	175	7,6	70	955520	181033
	175	11,4	70	955520	181034
	[mm]	[mm]	[mm]		

Spare parts	Dimension	Class-No.	Ident-No.
Mounting Devices		997300	177103
Mounting Rings	96x70x60	955520	177546
Pin-type face wrenches		985720	177102
Face Nuts	M68x1,5x14	995290	177104
Hydraulic Clumping Nuts	M68x1,5x56	933090	178787
Screwdrivers	SW4x100	985730	166091
	[mm]		

Finger Joint Cutters - Calculation of cutting width

Combination of the cutter sets depending on the wood thickness

Finger length [mm]	Wood thickness [mm]	Number of cutters	Finger length [mm]	Wood thickness [mm]	Number of cutters
10+15	24	1	20	28	1
10+15	51	2	20	59	2
10+15	77	3	20	90	3
10+15	104	4	20	121	4
10+15	131	5	20	152	5
10+15	157	6	20	183	6
10+15	184	7	20	214	7
10+15	210	8	20	245	8
10+15	237	9	20	276	9
10+15	264	10	20	307	10

Finger joint cutters - cross cutting with extended finger joint profile

Finger length [mm]	For machines with sizing device	For machines without sizing device	Finger length [mm]
10/10		X	No
10/11	X		10-11
15/15		X	No
15/16,5	X		15-16,5
20/20		X	No
20/22	X		20-22

Drawing profile example

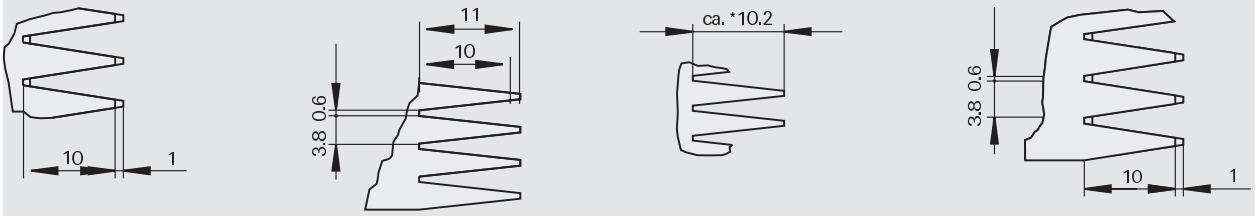

Fasteners for Jointing Cutterheads

1

HOMAG
ab 1975

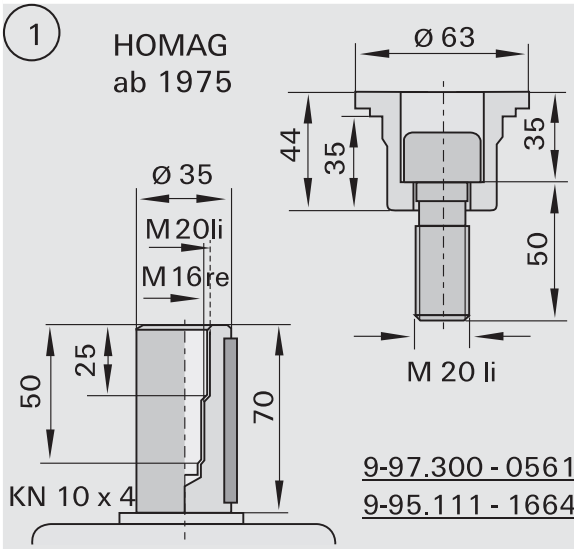

9-97.300 - 056120
9-95.111 - 166440

2

HOMAG
ab 1975

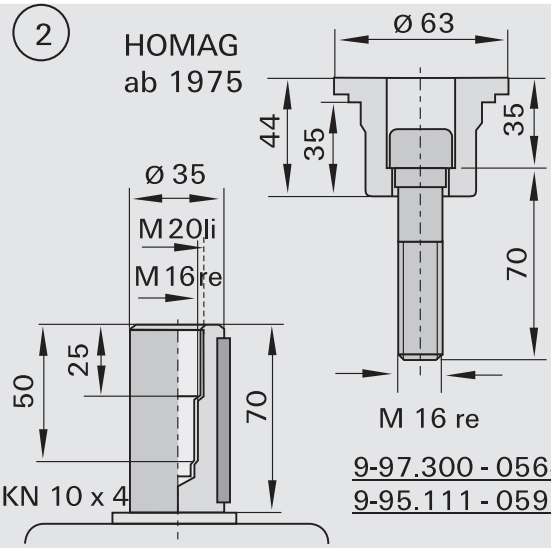

9-97.300 - 056497
9-95.111 - 059169

3

HOMAG

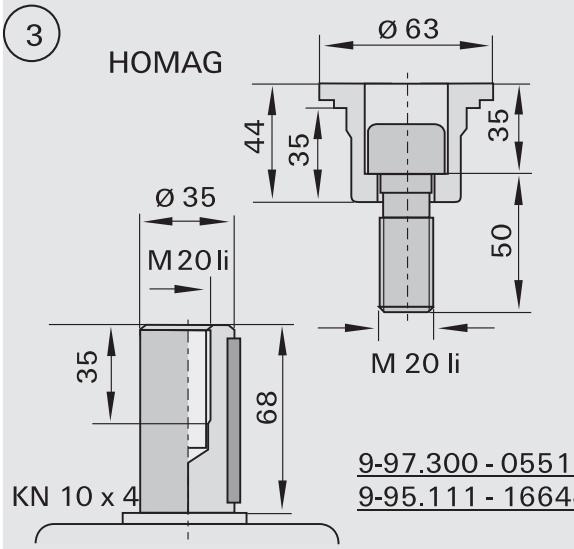

9-97.300 - 055120
9-95.111 - 166440

4

HOMAG

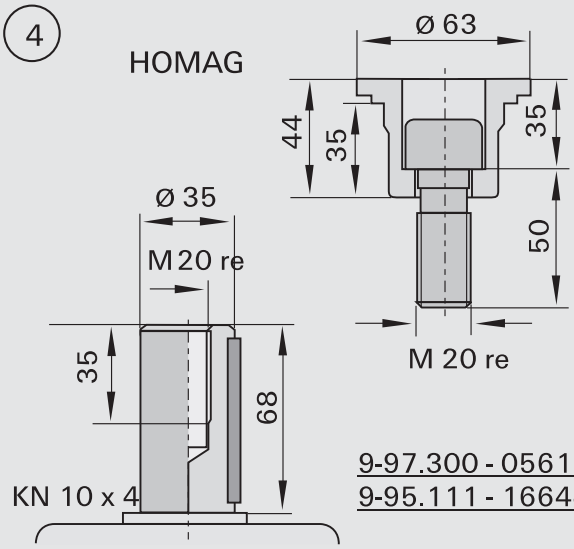

9-97.300 - 056120
9-95.111 - 166441

5

HOMAG

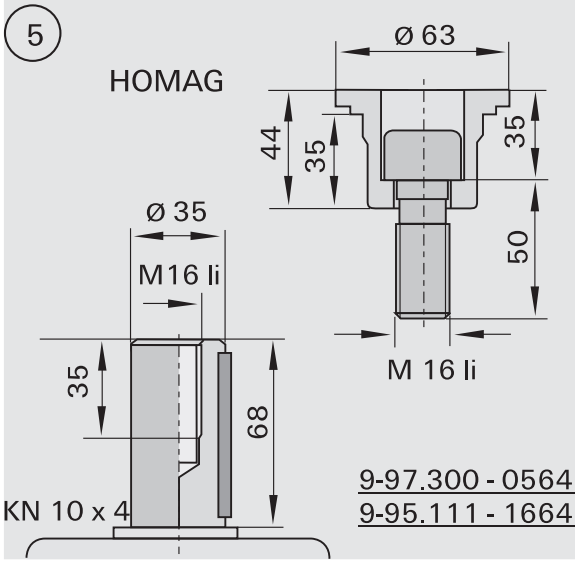

9-97.300 - 056497
9-95.111 - 166431

6

HOMAG

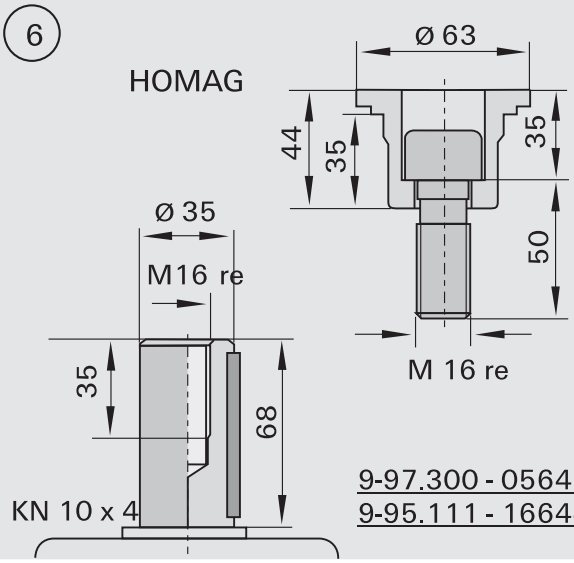

9-97.300 - 056497
9-95.111 - 166442

Fasteners for Jointing Cutterheads

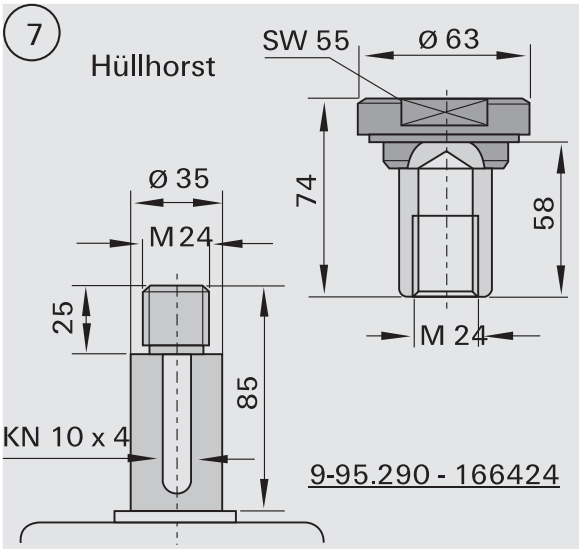

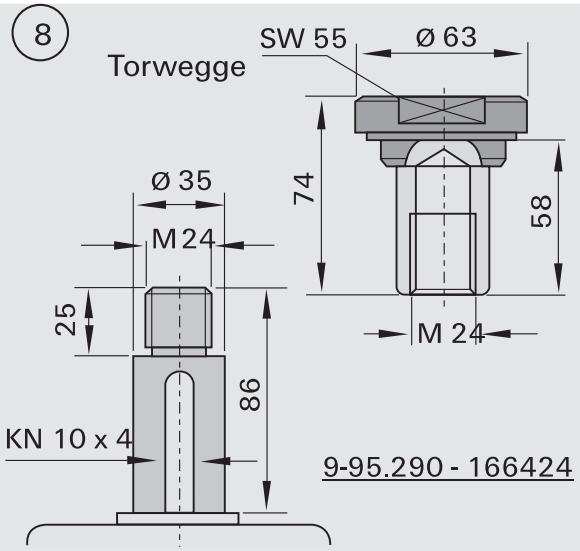

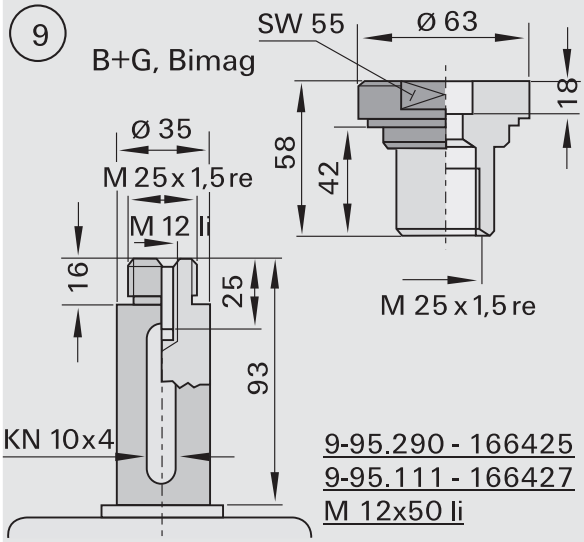

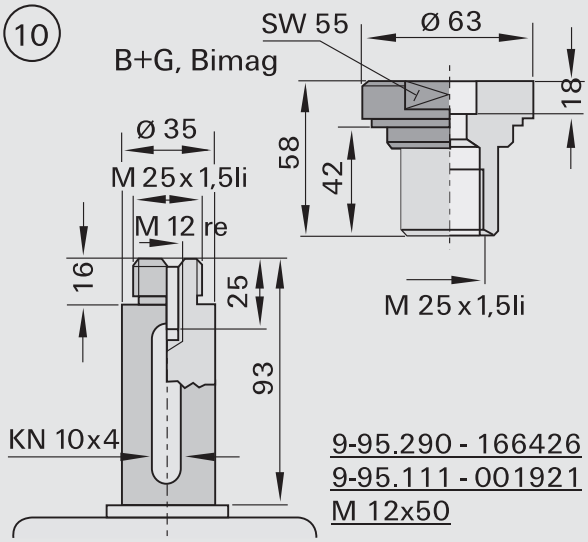

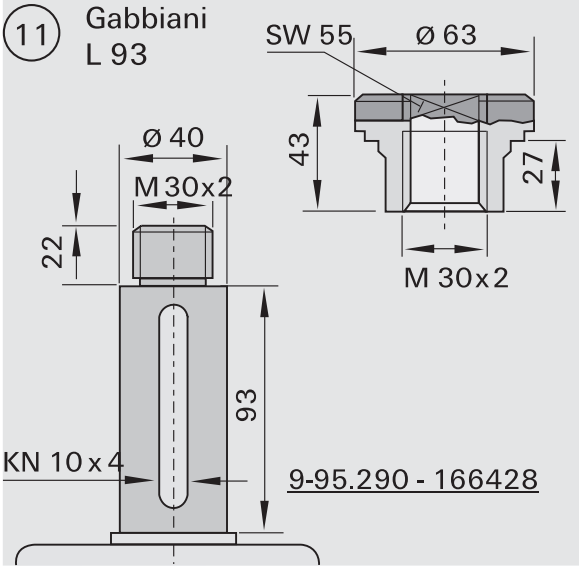

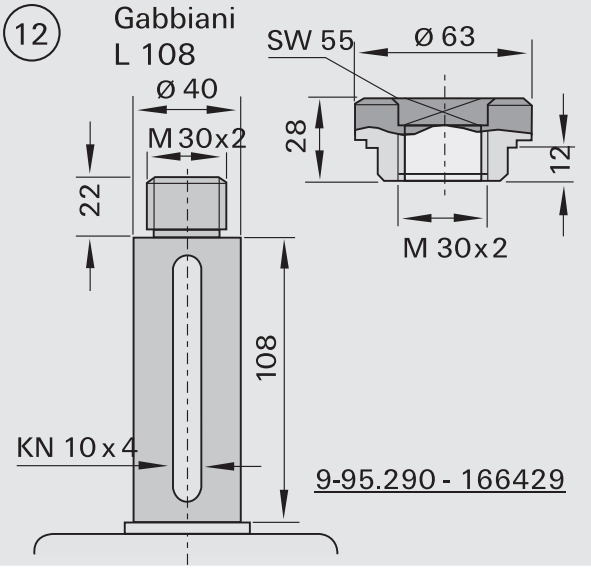

Fasteners for Jointing Cutterheads

13 M + S

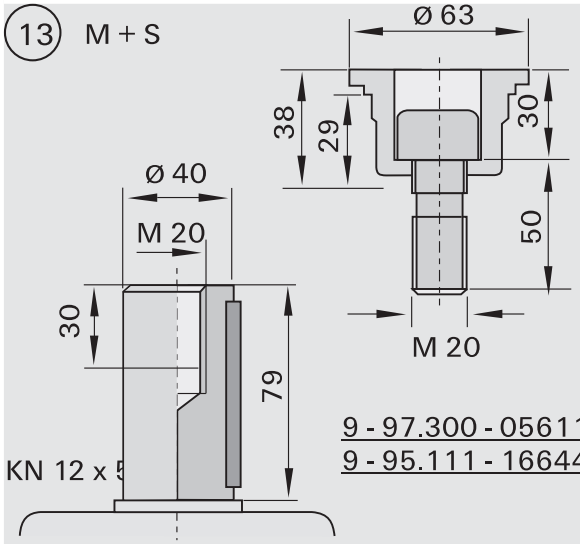

9 - 97.300 - 056115
9 - 95.111 - 166441

15 Dankaert

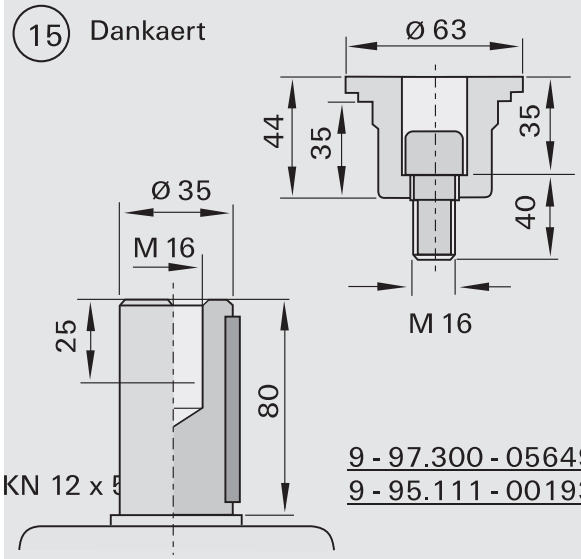

9 - 97.300 - 056497
9 - 95.111 - 001933

16 Frommia

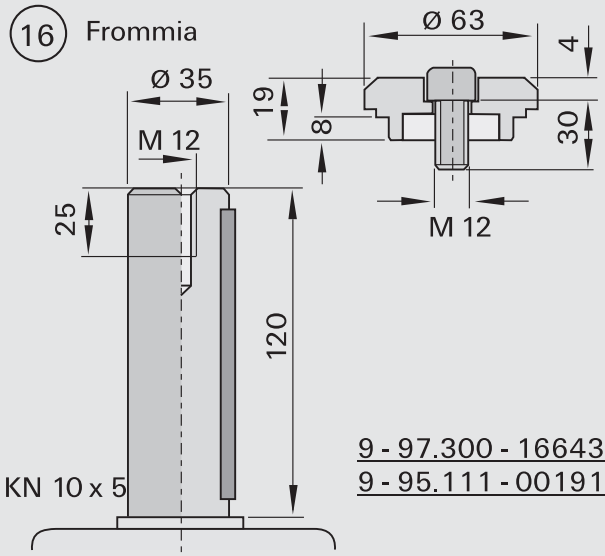

9 - 97.300 - 166436
9 - 95.111 - 001917

17 IMA
IMA-Combima

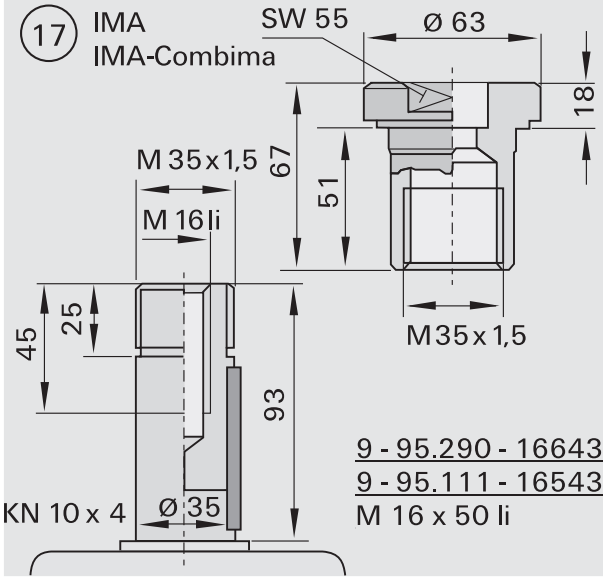

9 - 95.290 - 166430
9 - 95.111 - 165431
M 16 x 50 li

18 Wilmsmeyer
bis 1983

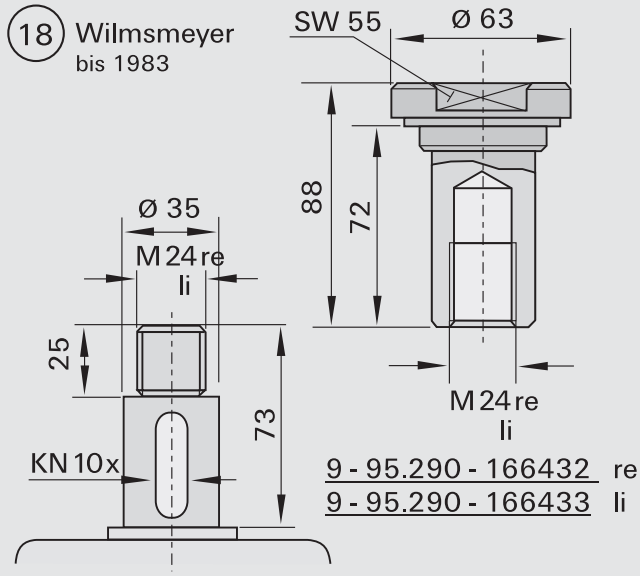

9 - 95.290 - 166432 re
9 - 95.290 - 166433 li

Fasteners for Jointing Cutterheads

19 Raimann

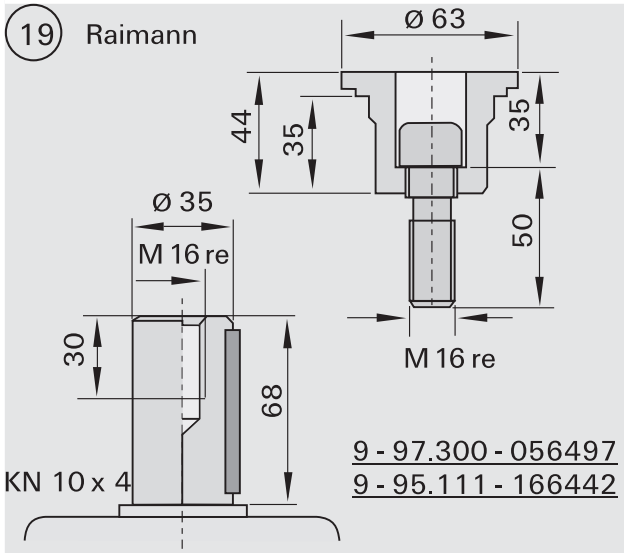

9 - 97.300 - 056497
9 - 95.111 - 166442

20 Raimann

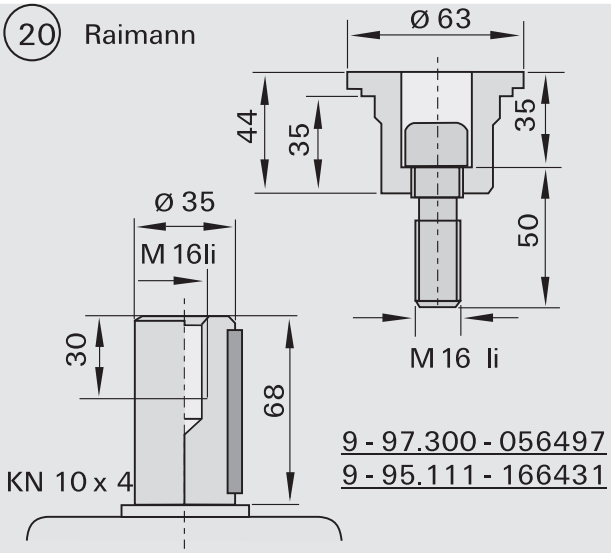

9 - 97.300 - 056497
9 - 95.111 - 166431

21 Costa

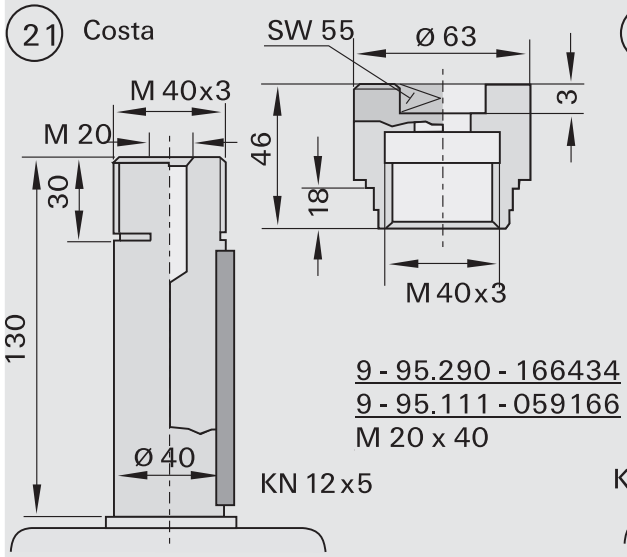

9 - 95.290 - 166434
9 - 95.111 - 059166
M 20 x 40

22 Costa

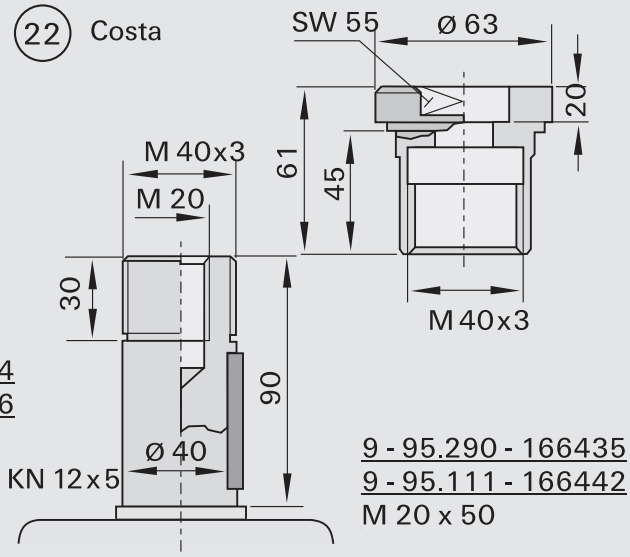

9 - 95.290 - 166435
9 - 95.111 - 166442
M 20 x 50

23 SPA

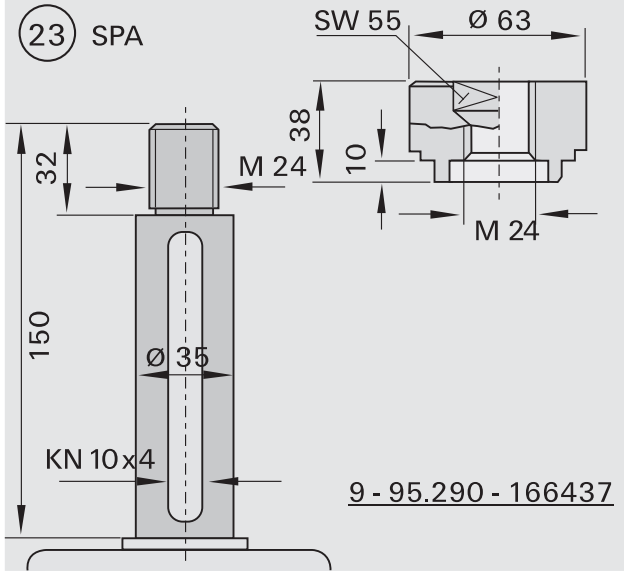

9 - 95.290 - 166437

24 SPA

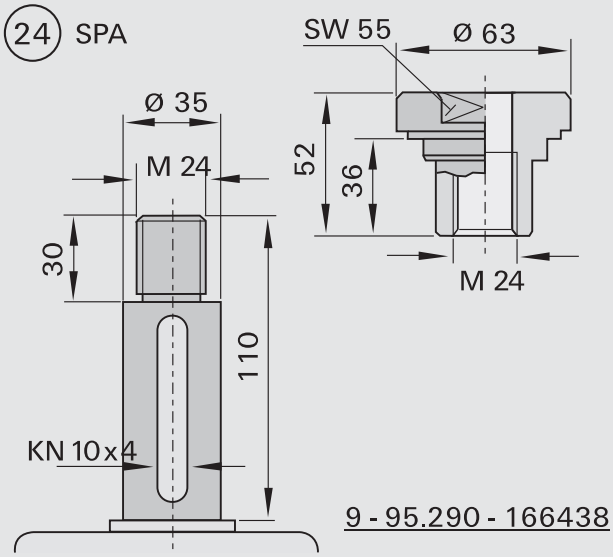

9 - 95.290 - 166438

Fasteners for Jointing Cutterheads

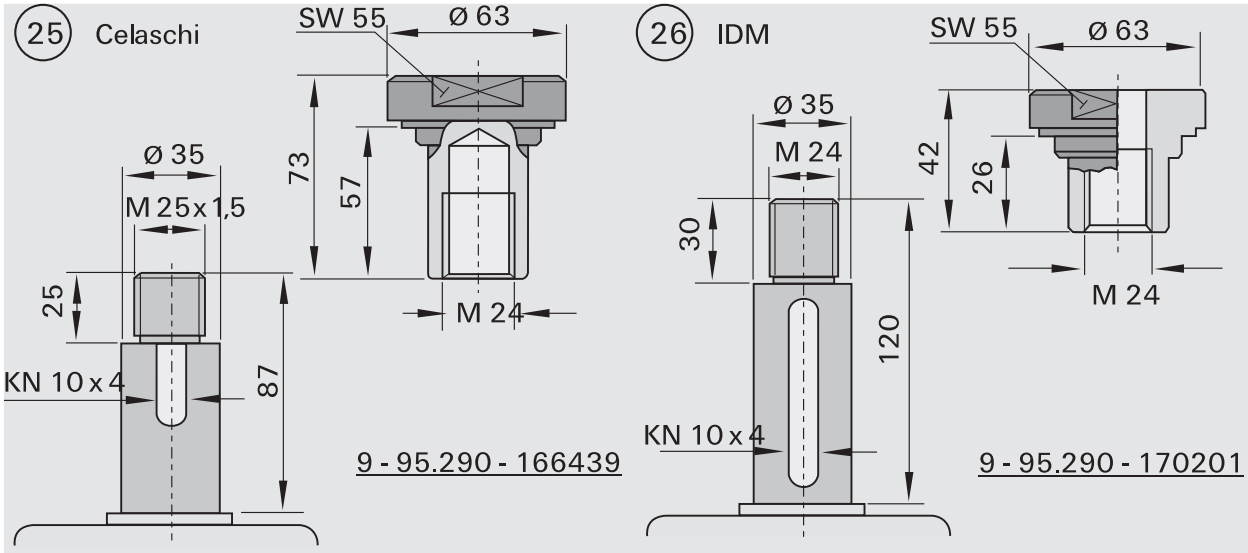

Determination of RPM [min-1]

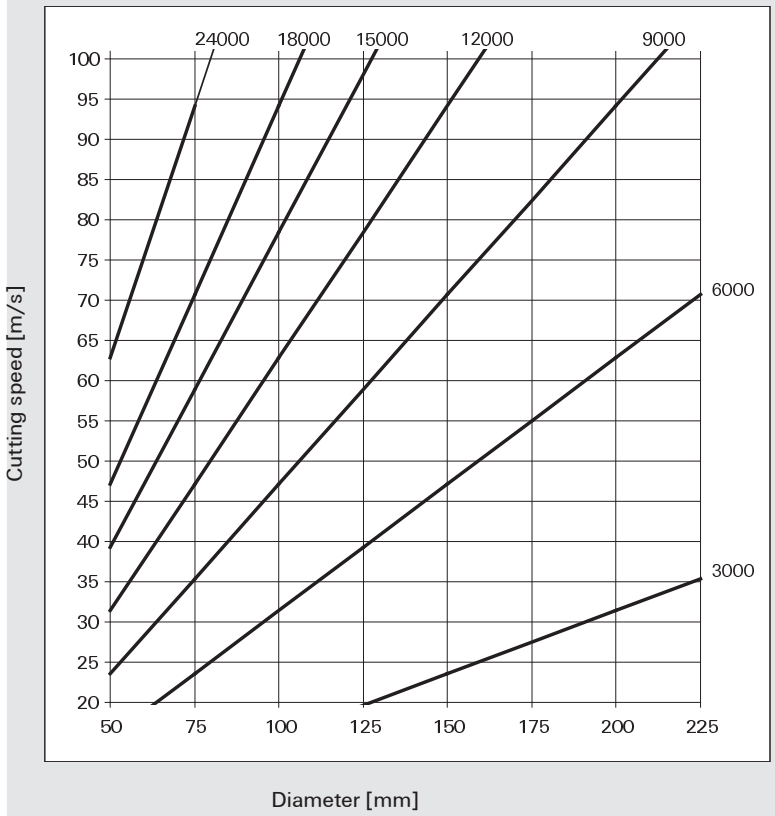

Feed rate per tooth

Milling

Workpiece material	Feed rate per tooth fz [mm]
Solid woods with the grain	0,60 - 0,80
Solid woods across the grain	0,30 - 0,40
Laminated woods	0,40 - 0,50
Raw panels	0,50 - 0,70
Laminated panels	0,20 - 0,40
Veneered panels	0,10 - 0,15

Planing

Cutting quality	Effective feed rate per tooth fz eff [mm]	Formulas for calculation
Fine	1,3 - 1,7	Feed rate vf [m/min]
Medium	1,7 - 2,5	Rotations per minute (RPM) [min-1]
Coarse	2,5 - 5,0	Number of teeth z
		Effective feed rate per tooth (tooth/knife progression) fz eff [mm]
		Tools with conventional clamping
		fz eff = (vf x 1000) / (n x 1)
		Tools with Hydro clamping
		fz eff = (vf x 1000) / (n x z)

Order / Inquiry for Special Tools: Cutters with Bore

Please copy and send the completed form to one of the LEUCO sales offices. (Only one tool description per form)

Customer-no.: _____
Company: _____
Plant: _____
Street: _____
Zip / City: _____
Country: _____
Contact partner: _____
Phone: _____
City and Date: _____

Order: o
Inquiry: o
Delivery (week no.): _____
(Not binding)
No. of pieces: _____
Fax: _____
Signature: _____

Machine

Make: _____
Model: _____
Type (e.g. DET, etc.): _____
RPM range [min-1] _____
Feed rate [m/min]: _____

Workpiece

Description: _____
Cutting quality: _____
Direction of cut:

Solid wood	With grain	o
	Across grain	o
	On end	o
Wood-based materials	Top layer	o
	Middle layer	o
	Top and middle layer	o

Coating

Yes o No o

Description: _____
Further Information _____

Tool

Single tool o
Tool set:
With tipped cutting edges: o
With exchangeable cutting edges:
EcoPro Cutterhead o
SuperProfiler o
UltraProfiler o
Standard o

Cutting diameter D [mm]: _____
basic diameter D1 [mm]: _____
Cutting width B [mm]: _____
Depth of cut [mm]:

Type of feed:	MAN	o	MEC	o
Sense of rotation:	Left	o	Right	o
Mode of application:	Against feed	o	With feed	o

No. of teeth [pcs.]:
Rakers: _____
Spur: _____
Grooving knives: _____
Edge breaker: _____
Arrangement of cutting edges:
Shear angle: Single-sided o
Alternate o

Interface

Bore d [mm]: _____

	Height	Width
Double keyway:		
Keyway:		

Clamping Bushing [Ø]: _____
Hydro Bushing [Ø]:: _____
Hydro-S-System: _____
S-System: _____
Other:

o check if applicable

Please indicate the following on workpiece samples or drawings:

Bottom side of workpiece	Dimensions
Sense of rotation	Application conditions
Motor spindle	Profile drawing
Hydro Bushing [Ø]::	Tool drawing

Please indicate clearly if the workpiece or the tool is shown.

Please indicate additional dimension and markings in the tool drawing.

518-01.0708

Checklist for molders (incl. „Weinig Powermat“ series)

Overview of the max.possible number of spindles (please mark with a cross)

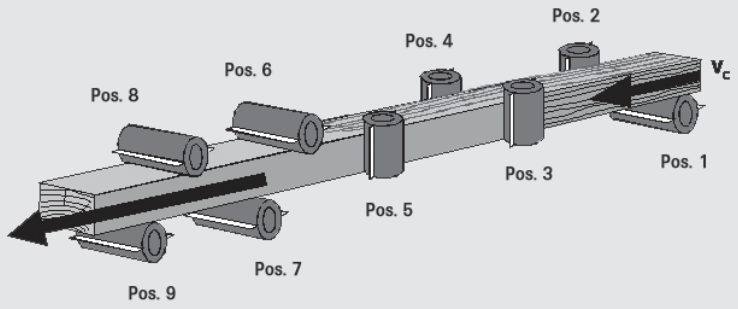

Universal spindle (pos. 10) can be combined with every type series.

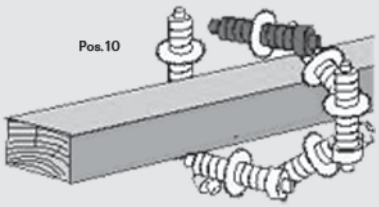

Universal spindle available: Yes O No O

Additional third spindle above (pos. 11), mostly after the first spindle below (see pos. 1): Yes O No O

Pos. 1

Spindle diameter (mm): _____

HSK interface: Yes O No O

Max. tool diameter (mm): _____

Max.RPM (min-1): _____ RPM variable: Yes O No O From _____ to _____

Max. vertical adjusting range (mm): _____

Max. horizontal adjusting range (mm): _____

Pos. 2

Spindle diameter (mm): _____

HSK interface: Yes O No O

Max. tool diameter (mm): _____

Max.RPM (min-1): _____ RPM variable: Yes O No O From _____ to _____

Max. vertical adjusting range (mm): _____

Max. horizontal adjusting range (mm): _____

Pos. 3

Spindle diameter (mm): _____

HSK interface: Yes O No O

Max. tool diameter (mm): _____

Max.RPM (min-1): _____ RPM variable: Yes O No O From _____ to _____

Max. vertical adjusting range (mm): _____

Max. horizontal adjusting range (mm): _____

Pos. 4

Spindle diameter (mm): _____

HSK interface: Yes O No O

Max. tool diameter (mm): _____

Max.RPM (min-1): _____ RPM variable: Yes O No O From _____ to _____

Max. vertical adjusting range (mm): _____

Max. horizontal adjusting range (mm): _____

497-03.1207

Checklist for molders (incl. „Weinig Powermat“ series)

Pos. 5

Spindle diameter (mm): _____

HSK interface: Yes O No O

Max. tool diameter (mm): _____

Max.RPM (min-1): _____ RPM variable: Yes O No O _____ to _____

Max. vertical adjusting range (mm): _____

Max. horizontal adjusting range (mm): _____

Pos. 6

Spindle diameter (mm): _____

HSK interface: Yes O No O

Max. tool diameter (mm): _____

Max.RPM (min-1): _____ RPM variable: Yes O No O _____ to _____

Max. vertical adjusting range (mm): _____

Max. horizontal adjusting range (mm): _____

Pos. 7

Spindle diameter (mm): _____

HSK interface: Yes O No O

Max. tool diameter (mm): _____

Max.RPM (min-1): _____ RPM variable: Yes O No O From _____ to _____

Max. vertical adjusting range (mm): _____

Max. horizontal adjusting range (mm): _____

Pos. 6

Spindle diameter (mm): _____

HSK interface: Yes O No O

Max. tool diameter (mm): _____

Max.RPM (min-1): _____ RPM variable: Yes **O** No O From _____ to _____

Max. vertical adjusting range (mm): _____

Max. horizontal adjusting range (mm): _____

Pos. 9

Spindle diameter (mm): _____

HSK interface: Yes O No O

Max. tool diameter (mm): _____

Max.RPM (min-1): _____ RPM variable: Yes O No O From _____ to _____

Max. vertical adjusting range (mm): _____

Max. horizontal adjusting range (mm): _____

Pos. 10

Spindle diameter (mm): _____

HSK interface: Yes O No O

Max. tool diameter (mm): _____

Max.RPM (min-1): _____ RPM variable: Yes O No O From _____ to _____

Max. vertical adjusting range (mm): _____

Max. horizontal adjusting range (mm): _____

Pos. 11

Spindle diameter (mm): _____

HSK interface: Yes O No O

Max. tool diameter (mm): _____

Max.RPM (min-1): _____ RPM variable: Yes O No O From _____ to _____

Max. vertical adjusting range (mm): _____

Max. horizontal adjusting range (mm): _____

497-03.1207